Polo Estate 1998 ➤

General body repairs, exterior

Edition 06.2000

Protected by copyright. Copying for private or commercial purposes, in part or in whole, is not permitted unless authorised by Volkswagen AG. Volkswagen AG does not guarantee or accept any liability with respect to the correctness of information in this document. Copyright by Volkswagen AG.

satelettronica

List of Workshop Manual Repair GroupsList of Workshop Manual Repair GroupsList of Workshop Manual Repair Groups

Polo Estate 1998 ➤

General body repairs, exterior

Repair Group

50 - Body front
55 - Bonnet, Flaps
57 - Front doors/Door components/Central locking system
58 - Rear doors/Door components
60 - Sliding/tilting roof
63 - Bumpers
64 - Glazing
66 - Exterior equipment

Protected by copyright. Copying for private or commercial purposes, in part or in whole, is not permitted unless authorised by Volkswagen AG. Volkswagen AG does not guarantee or accept any liability with respect to the correctness of information in this document. Copyright by Volkswagen AG.

satelettronica

Technical information should always be available to the foremen and mechanics, because their careful and constant adherence to the instructions is essential to ensure vehicle road-worthiness and safety. In addition, the normal basic safety precautions for working on motor vehicles must, as a matter of course, be observed.

All rights reserved.
No reproduction without prior agreement from publisher.

Copyright © 2011 Volkswagen AG, Wolfsburg

Contents

50 - Body front . . . 1

1 Body - front . . . 1
1.1 Body - front . . . 1
1.2 Removing and installing lock carrier with attachments . . . 1
1.3 Removing and installing front wing . . . 3
1.4 Removing sealing piece . . . 5

55 - Bonnet, Flaps . . . 6

1 Bonnet . . . 6
1.1 Bonnet . . . 6
1.2 Removing and installing bonnet . . . 6
1.3 Removing and installing bonnet lock cable . . . 8

2 Rear boot lid/tailgate (Polo Classic, Polo Estate) . . . 10
2.1 Rear boot lid/tailgate (Polo Classic, Polo Estate) . . . 10
2.2 Tools . . . 10
2.3 Removing gas strut . . . 10
2.4 Removing gas strut (Polo Estate) . . . 11
2.5 Releasing gas from strut . . . 12
2.6 Adjusting tailgate (Estate) . . . 12
2.7 Removing and installing tailgate/boot lid lock . . . 15
2.8 Removing and installing lock cylinder . . . 17
2.9 Maintaining common key locking . . . 18

3 Tank flap unit . . . 19
3.1 Tank flap unit . . . 19
3.2 Assembly overview (Caddy) . . . 19
3.3 Tools . . . 20
3.4 Removing and installing tank flap unit (Caddy) . . . 20
3.5 Dismantling and assembling tank flap unit (Caddy) . . . 21

57 - Front doors/Door components/Central locking system . . . 23

1 Front door . . . 23
1.1 Front door . . . 23
1.2 Front door - assembly overview . . . 23
1.3 Tools . . . 25
1.4 Removing and installing door . . . 25
1.5 Adjusting door . . . 26
1.6 Door handle - Assembly overview . . . 28
1.7 Removing and installing door handle . . . 30
1.8 Removing inner release handle . . . 31
1.9 Maintaining common key locking . . . 31
1.10 Door lock - Assembly overview . . . 32
1.11 Removing and installing door lock . . . 33

2 Central locking . . . 35
2.1 Central locking . . . 35
2.2 Central locking - Assembly overview (Caddy) . . . 35
2.3 Central locking - Assembly overview (Polo Classic) . . . 38
2.4 Central locking - Assembly overview (Polo Estate) . . . 42
2.5 New coupling and junction piece for pipe connector . . . 46
2.6 Removing and installing bi-pressure pump (Caddy) . . . 46
2.7 Removing and installing bi-pressure pump (Polo Classic) . . . 47
2.8 Removing and installing bi-pressure pump (Polo Estate) . . . 48
2.9 Removing and installing tank flap positioning element (Polo Classic) . . . 48
2.10 Removing and installing tank flap positioning element (Polo Estate) . . . 49
2.11 Removing and installing front door positioning element . . . 50

Copyright by Volkswagen AG, Wolfsburg. Copying for private or commercial purposes, in part or in whole, is not permitted unless authorised by Volkswagen AG. Volkswagen AG does not guarantee or accept any liability with respect to the correctness of information in this document.
satelettronica

2.12 Removing and installing rear door lock positioning element (Caddy) 52
2.13 Removing and installing boot lid/tailgate lock positioning element (Polo Classic, Polo Estate) 52
2.14 Removing and installing boot lid positioning element (Polo Classic) 54
2.15 Removing and installing tailgate positioning element (Polo Estate) 54
2.16 Activating individual door opening of central locking system 55
2.17 Functional check of central locking 55
2.18 Functional check of central locking with radio remote control 55
2.19 Synchronising keys with radio remote control > 09.99 56
2.20 Removing and installing batteries for the main key with radio wave remote control 57

58 - Rear doors/Door components 58

1 Rear door (Caddy) 58
1.1 Rear door (Caddy) 58
1.2 Servicing rear wing doors 58
1.3 Adjusting rear wing door locks 63
1.4 Servicing left door lock operating mechanism 64
1.5 Servicing right door lock operating mechanism 66

2 Rear door (Polo Classic, Polo Estate) 68
2.1 Rear door (Polo Classic, Polo Estate) 68
2.2 Rear door - Assembly overview 68
2.3 Removing and installing door 72
2.4 Adjusting door 72
2.5 Door handle - Assembly overview 73
2.6 Removing and installing door handle 74
2.7 Removing inner release handle 75
2.8 Servicing door lock with operating mechanism 76
2.9 Removing and installing door lock 78

60 - Sliding/tilting roof 79

1 Sliding/tilting roof with glass panel >09.99 79
1.1 Sliding/tilting roof with glass panel >09.99 79
1.2 Sliding/tilting roof with glass panel - Assembly overview 79
1.3 Removing sliding/tilting roof glass panel 83
1.4 Installing sliding/tilting roof glass panel 83
1.5 Sliding/tilting roof glass panel (height adjustment) 84
1.6 Adjusting panel seal 85
1.7 Checking and adjusting parallel running 85
1.8 Removing sliding headlining 87
1.9 Installing sliding headlining 87
1.10 Removing and installing carrier unit 88
1.11 Cleaning water drain hoses (Polo Classic) 90
1.12 Cleaning water drain hoses (Polo Estate) 91
1.13 Sliding/tilting sunroof with glass panel 10.99 > 92
1.14 Function 92
1.15 Sliding/tilting roof with glass panel - Assembly overview 93
1.16 Removing sliding/tilting sunroof glass panel 97
1.17 Installing sliding/tilting sunroof glass panel 97
1.18 Adjusting sliding/tilting roof glass panel (height adjustment) 98
1.19 Adjusting panel seal 99
1.20 Renewing panel seal 100
1.21 Removing wind deflector 101
1.22 Removing and installing sliding headlining 101
1.23 Removing sliding/tilting sunroof preselector switch 102
1.24 Removing drive for sliding/tilting sunroof 103
1.25 Adjusting drive for sliding/tilting sunroof ("0" position) 103
1.26 Checking parallel running 103

Protected by Copyright. Copying for private or commercial purposes, in part or in whole, is not permitted unless authorised by Volkswagen AG. Volkswagen AG does not guarantee or accept any liability with respect to the correctness of information in this document. Copyright by Volkswagen AG.
satelettronica

1.27 Adjusting parallel running . . . 104
1.28 Removing coulisse guide . . . 105
1.29 Removing and installing carrier unit . . . 106
1.30 Removing guide and cable . . . 108
1.31 Cleaning water drain hoses (Polo Classic) . . . 110
1.32 Cleaning water drain hoses (Polo Estate) . . . 111

63 - Bumpers . . . 112

1 Front bumper . . . 112
1.1 Front bumper . . . 112
1.2 Assembly overview . . . 112

2 Rear bumper . . . 115
2.1 Rear bumper . . . 115
2.2 Assembly overview (Caddy) . . . 115
2.3 Assembly overview (Polo Classic) . . . 117
2.4 Assembly overview (Polo Estate) . . . 120

64 - Glazing . . . 123

1 Flush bonded windows . . . 123
1.1 Flush bonded windows . . . 123
1.2 Tools . . . 123
1.3 Materials . . . 124
1.4 Windscreen - Assembly overview . . . 125
1.5 Removing windscreen . . . 126
1.6 Installing windscreen . . . 127
1.7 Side window (Polo Classic) - Assembly overview . . . 128
1.8 Removing undamaged side window (Polo Classic) . . . 128
1.9 Removing broken side window (Polo Classic) . . . 129
1.10 Installing side window (Polo Classic) . . . 129
1.11 Side window (Polo Estate) - Assembly overview . . . 130
1.12 Removing undamaged side window (Polo Estate) . . . 130
1.13 Removing broken side window (Polo Estate) . . . 132
1.14 Installing side window (Polo Estate) . . . 132
1.15 Rear window (Polo Classic) - Assembly overview . . . 133
1.16 Removing undamaged rear window (Polo Classic) . . . 134
1.17 Removing broken rear window (Polo Classic) . . . 135
1.18 Installing rear window (Polo Classic) . . . 135
1.19 Rear window (Polo Estate) - Assembly overview . . . 136
1.20 Removing undamaged rear window (Polo Estate) . . . 136
1.21 Removing broken rear window (Polo Estate) . . . 138
1.22 Installing rear window (Polo Estate) . . . 138
1.23 Preparing old undamaged window for glazing . . . 139
1.24 Preparing new window for glazing . . . 140
1.25 Preparing new window for glazing (Polo Estate) . . . 141
1.26 Preparing body flange for glazing . . . 142
1.27 Installation instructions . . . 143
1.28 Curing time . . . 143
1.29 Touching up paint damage . . . 144
1.30 Cleaning off surplus adhesive sealing material . . . 144

2 Windows secured by threaded fasteners . . . 145
2.1 Windows secured by threaded fasteners . . . 145
2.2 Removing and installing side window (Caddy) . . . 145

3 Door windows . . . 147
3.1 Door windows . . . 147
3.2 Front door window - Assembly overview . . . 147
3.3 Removing front door window . . . 148
3.4 Adjusting front door window . . . 148

satelettronica

3.5 Removing and installing front window lifter 149
3.6 Rear door window - Assembly overview 150
3.7 Removing and installing rear door window (Polo Classic) 152
3.8 Removing and installing rear door window (Polo Estate) 153
3.9 Removing rear window lifters 155

66 - Exterior equipment 156

1 Roof moulding 156
1.1 Roof moulding 156
1.2 Removing and installing roof moulding (Caddy) 156
1.3 Removing and installing roof moulding (Polo Classic, Polo Estate) 160

2 Roof railing 162
2.1 Roof railing 162
2.2 Removing and installing roof railing 162

3 Trim 165
3.1 Trim 165
3.2 Removing and installing radiator grille with trim frame 165
3.3 Removing and installing plenum chamber cover 167
3.4 Removing and installing underbody cover (Polo Classic) 169

4 Wheel housing liner 170
4.1 Wheel housing liner 170
4.2 Removing and installing front wheel housing liner 170
4.3 Removing and installing rear wheel housing liner (Polo Classic, Polo Estate) 172

5 Protective strips 173
5.1 Protective strips 173
5.2 Renewing side protective strips (Caddy) 173
5.3 Renewing side protective strips (Polo Classic, Polo Estate) 176
5.4 Renewing roof protective strips (Polo Estate) 179

6 Rear view mirror 182
6.1 Rear view mirror 182
6.2 Tools 182
6.3 Exterior mirror (Caddy) 183
6.4 Exterior mirror (Polo Classic, Polo Estate) 185
6.5 Removing mirror housing (Polo Classic, Polo Estate) 10.99 > 192

Protected by copyright. Copying for private or commercial purposes, in whole or in part, is not permitted unless authorised by Volkswagen AG. Volkswagen AG does not guarantee or accept any liability with respect to the correctness of information in this document. Copyright by Volkswagen AG.
satelettronica

50 - Body front

1 - Body - front

1.1 - Body - front

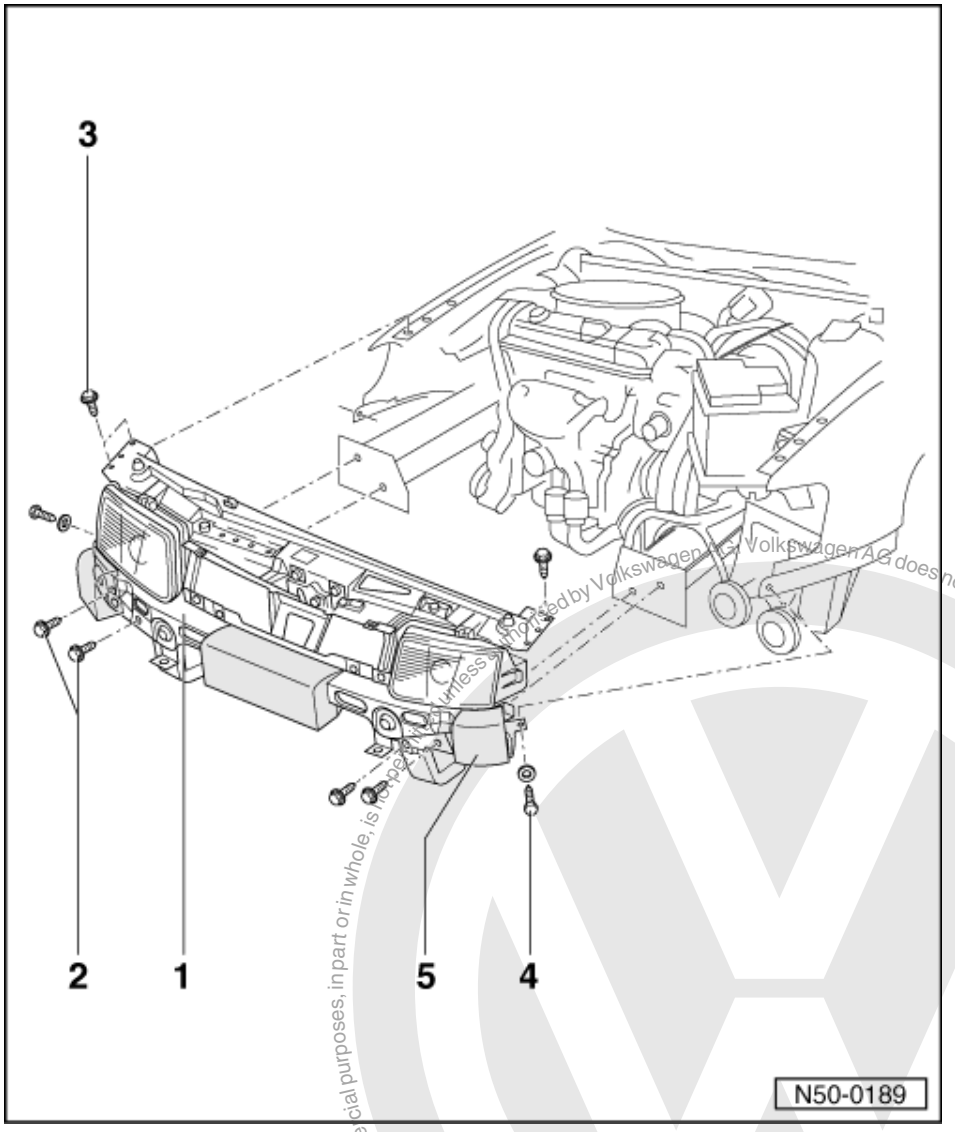

1.2 - Removing and installing lock carrier with attachments

1 Lock carrier with attachments
- Must be installed stress-free

2 Combi-bolt
- 23 Nm

3 Hexagon head bolt
- 5 Nm

4 Hexagon bolt
- With washer

satelettronica
Protected by copyright. Copying for private or commercial purposes, in part or in whole, is not permitted unless authorised by Volkswagen AG. Volkswagen AG does not guarantee or accept any liability with respect to the correctness of information in this document. Copyright by Volkswagen AG.

5 Deformation element

- Bonded
- Bond with universal adhesive D 001 200 if required

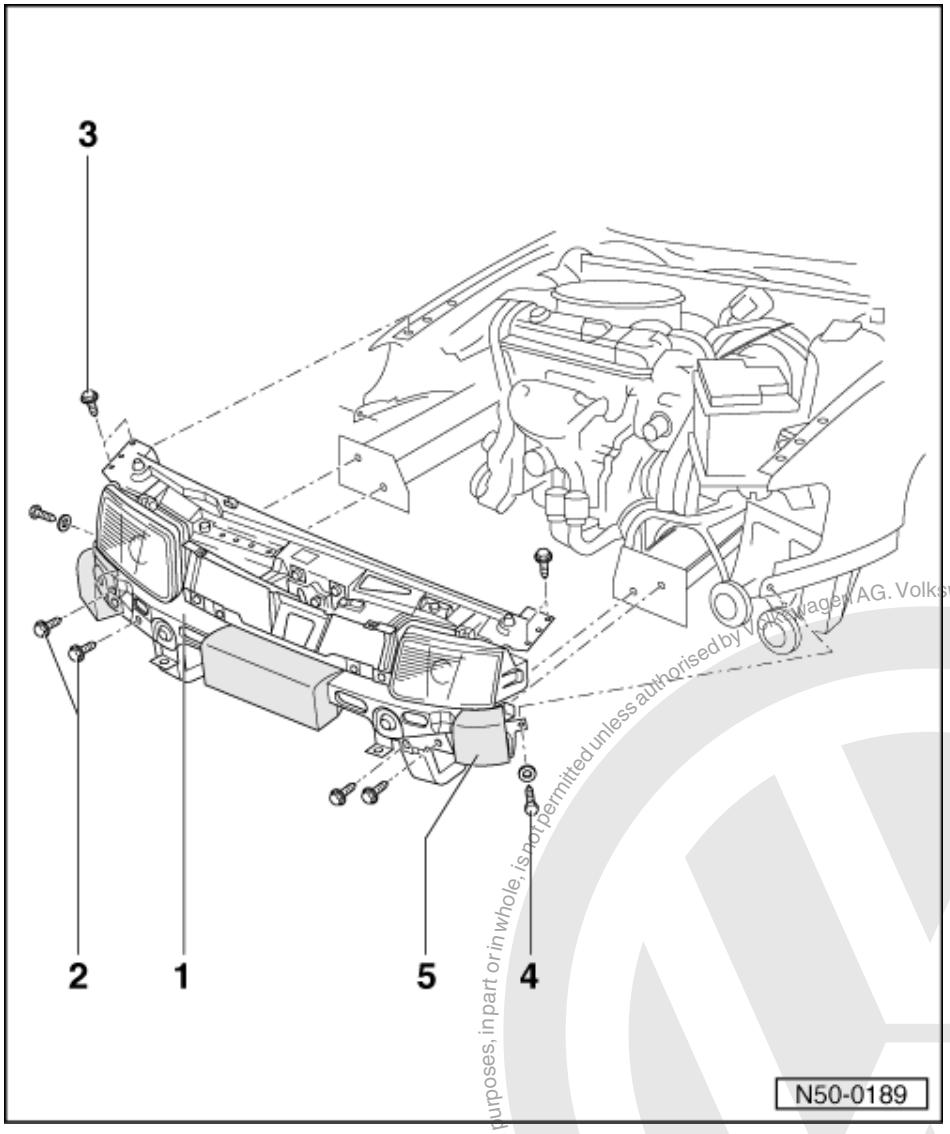

Removing

- Disconnect connectors and coolant hoses. Unhook cable for bonnet lock.
- Remove front bumper => Page 112 .
- Release refrigerant pipe/hose from lock carrier but do not open (vehicles with air conditioning system only).
- Remove hexagon bolts - 4 -.
- Pull outer deformation elements - 5 - off slightly if combi-bolts - 2 - are covered.
- Remove combi-bolts - 2 - and hexagon bolts - 3 -.
- Pull off lock carrier - 1 - with attachments.

Protected by copyright. Copyright by Volkswagen AG. Volkswagen AG does not guarantee or accept any liability with respect to the correctness of information in this document. Copyright by Volkswagen AG. Volkswagen AG. is not permitted unless authorised by Volkswagen AG. Volkswagen AG does not guarantee or accept any liability with respect to the correctness of information in this document. Copyright by Volkswagen AG.
satelettronica

1.3 - Removing and installing front wing

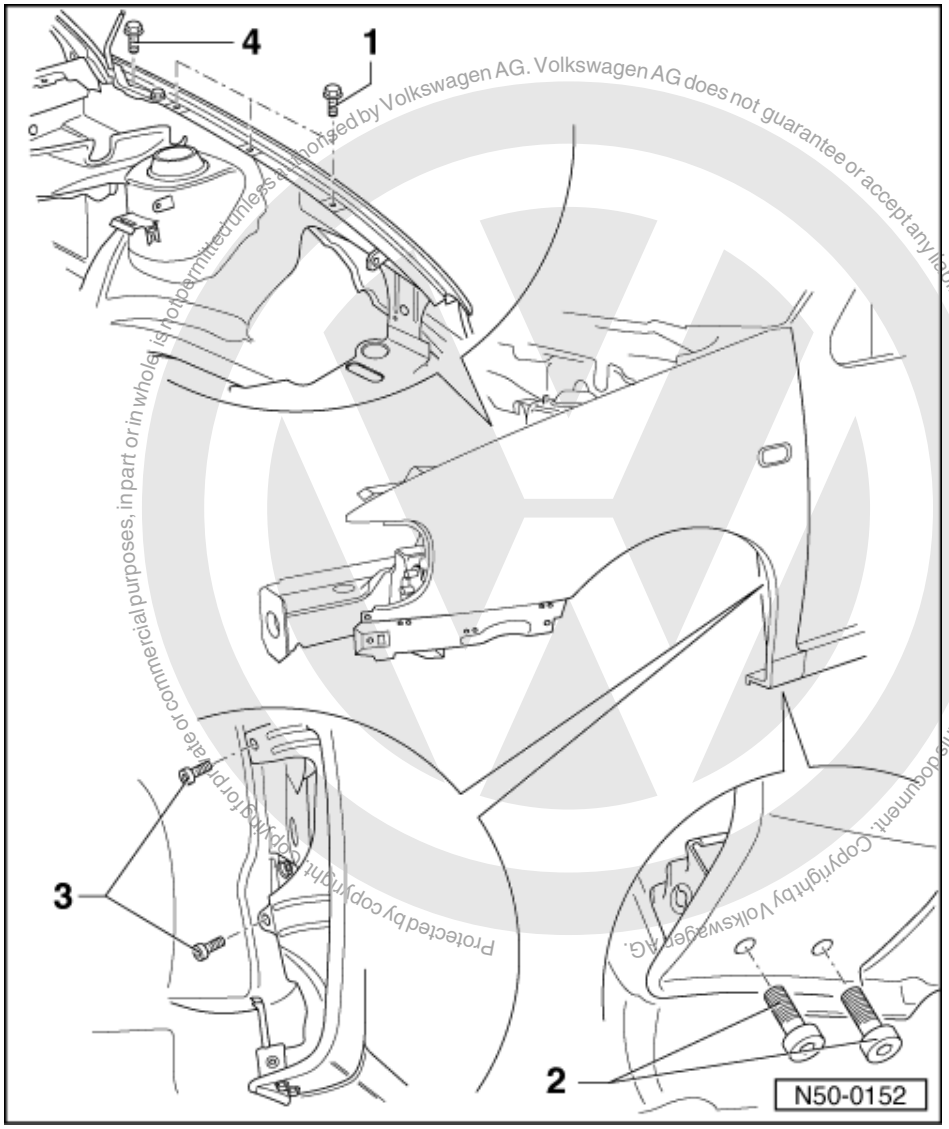

Protected by copyright. Copyright by Volkswagen AG. Volkswagen AG does not guarantee or accept any liability with respect to the correctness of information in this document. Copyright by Volkswagen AG. Reproduction, in part or in whole, is not permitted unless authorised by Volkswagen AG for commercial purposes, in part or in whole, is not permitted unless

Removing

- Remove radiator grille with trim frame, front bumper and wheel housing liner.
- Removing sealing piece => Page 5 .
- Remove lock carrier securing bolts on respective side.
- Remove hexagon bolts -1-.
- Remove bonnet hinge rear securing bolt -4-.

satelettronica

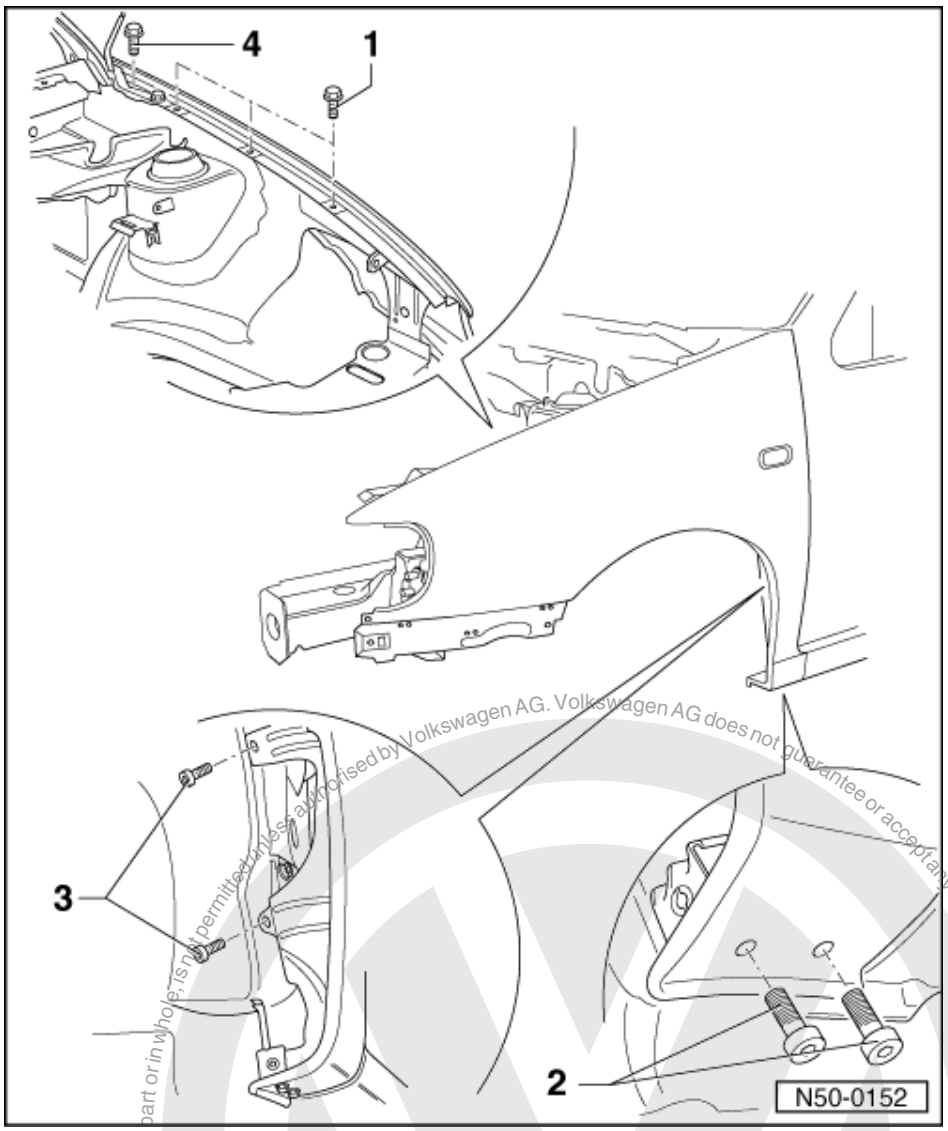

- Remove underbody sealant from securing bolts -2- and -3- and remove bolts.
- Heat wing at contact points in area of A-pillar with a hot air blower if required and pull wing off (if necessary cut through PVC material with an upholstery knife, this requires the help of a second mechanic).

Note:

PVC must only be heated lightly and briefly. PVC must not change in colour or blister.

Installing

Before bolting on wing, each point of bolting in area of wheel housing/A-pillar must be given a zinc packing AKL 381 035 50.

Protected by copyright. Copying for private or commercial purposes, in part or in whole, is not permitted unless authorised by Volkswagen AG. Volkswagen AG does not guarantee or accept any liability with respect to the correctness of information in this document. Copyright by Volkswagen AG.
satelettronica

1.4 - Removing sealing piece

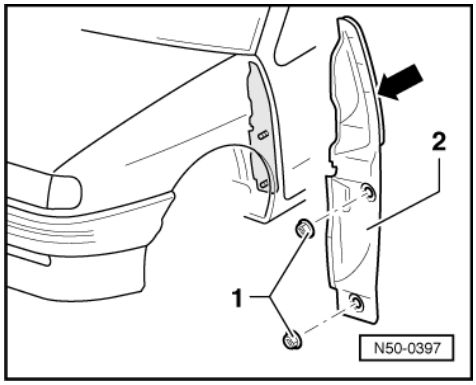

- Remove wheel housing liner => Page 170 .
- -> Remove hexagon combi-nut -1-.
- Pull sealing piece -2- out from wing.

Install in reverse order.

- When installing fit sealing piece -2- lip -arrow- into wing and then press onto studs.

Protected by copyright. Copying for private or commercial purposes, in part or in whole, is not permitted unless authorised by Volkswagen AG. Volkswagen AG does not guarantee or accept any liability with respect to the correctness of information in this document. Copyright by Volkswagen AG.

satelettronica

55 - Bonnet, Flaps

1 - Bonnet

1.1 - Bonnet

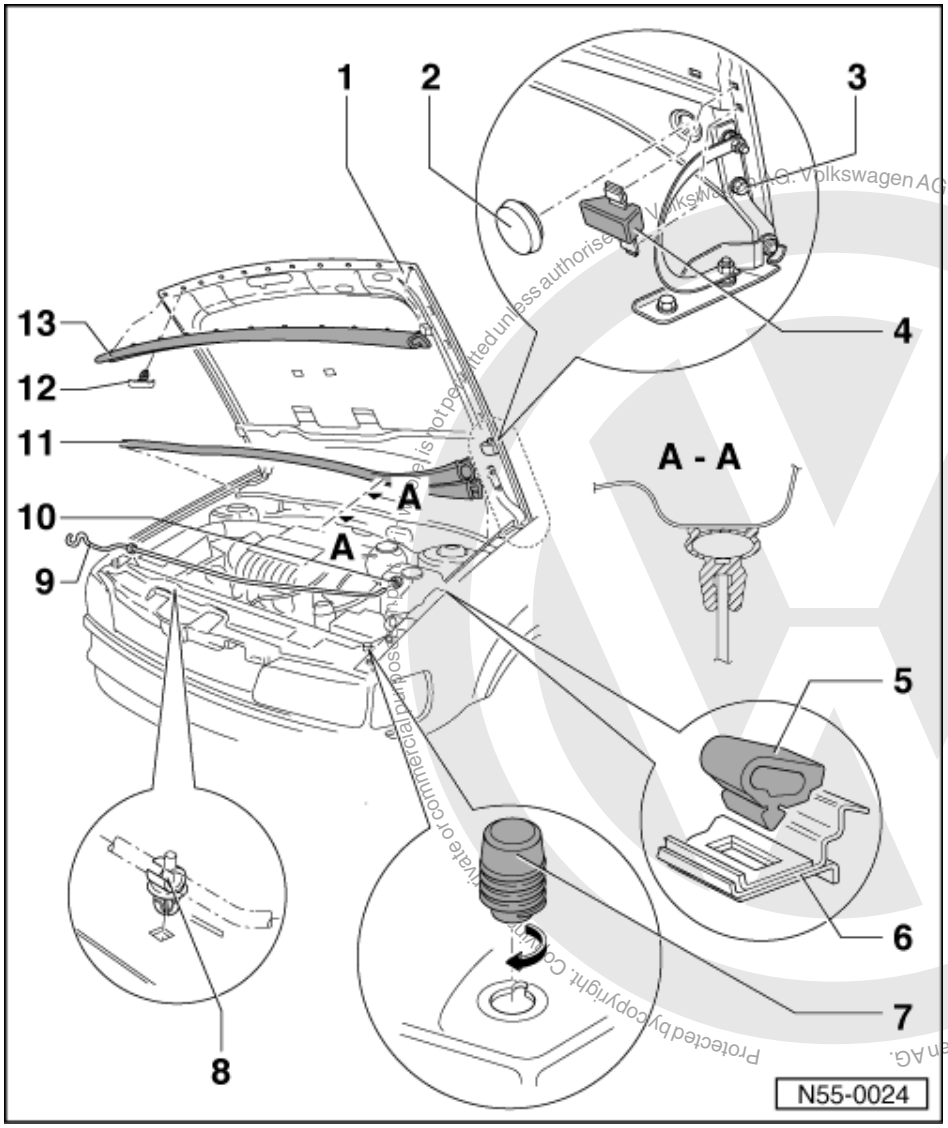

1.2 - Removing and installing bonnet

1 Boot lid/tailgate
- Adjusting - at hinge within oversized holes
- Carry out corrosion protection measures to hinges and bolts after reinstalling or adjusting

2 Plug

3 Hexagon bolt
- 23 Nm

4 Filler piece

5 Guide piece

Protected by copyright. Copyright by Volkswagen AG. Volkswagen AG does not guarantee or accept any liability with respect to the correctness of information in this document. Copyright by Volkswagen AG. Reproduction or publication for private or commercial purposes is not permitted unless authorised by Volkswagen AG.
satelettronica

6 Wing

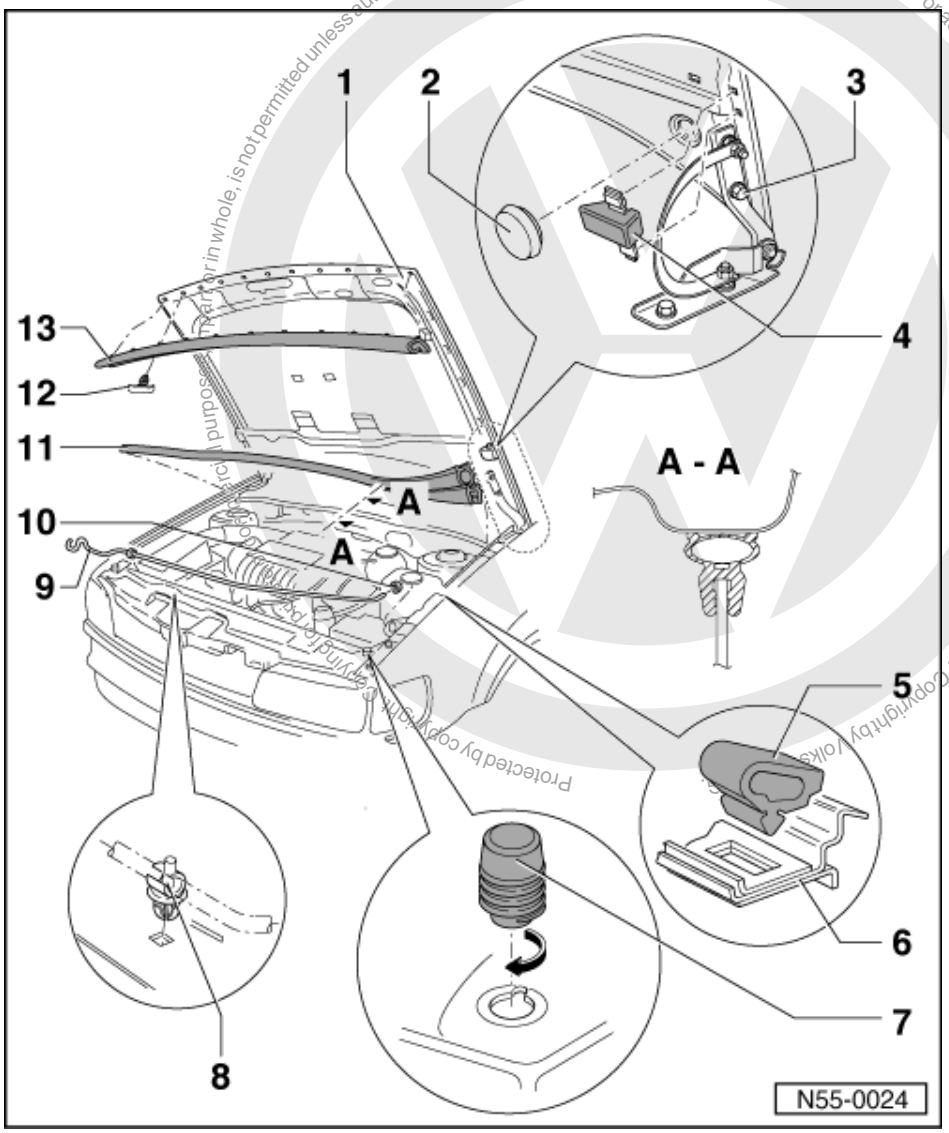

7 Rubber buffer
8 Clip
- With spreader pin

9 Stay
10 Bonded rubber bush
11 Plenum chamber seal
- Pushed onto flange

12 Clip
13 Cd seal

satelettronica

1.3 - Removing and installing bonnet lock cable

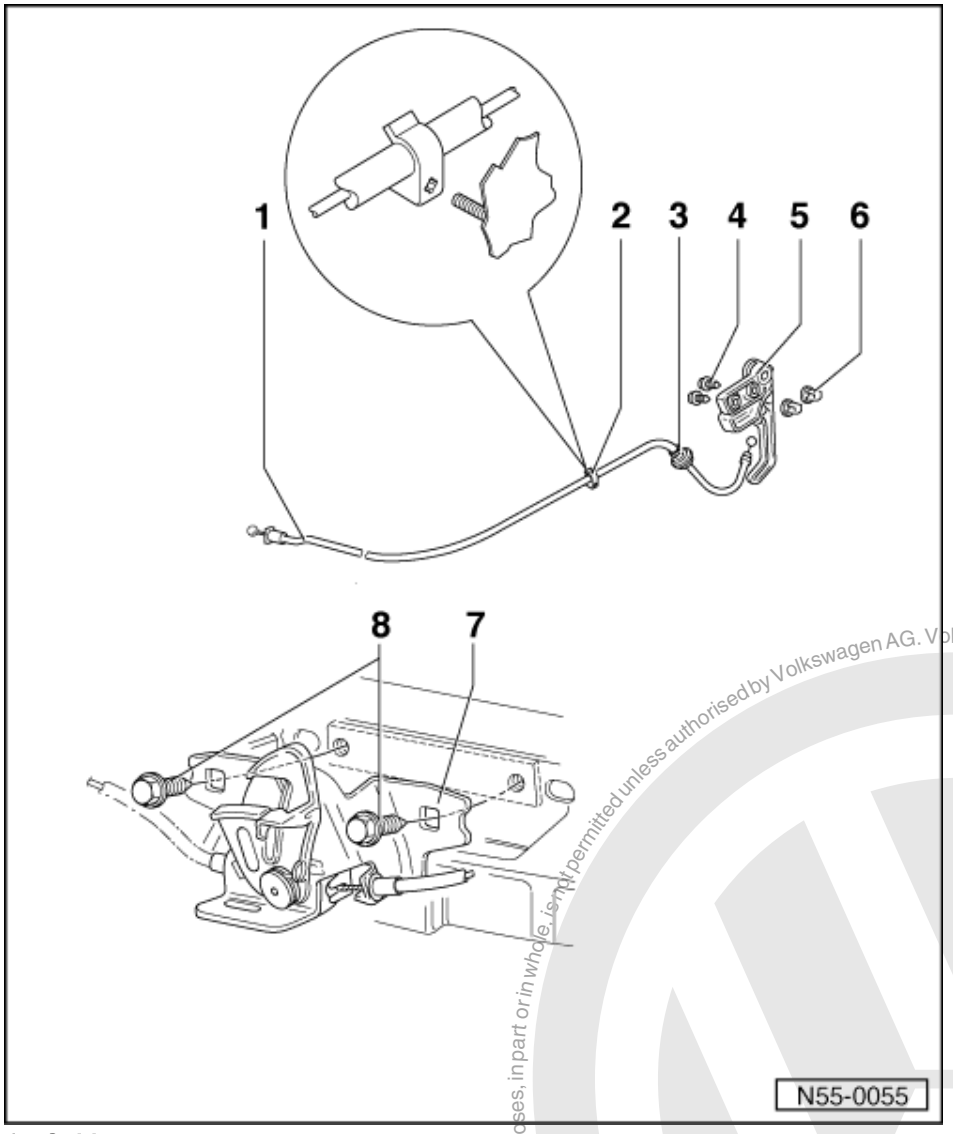

1 Cable
- ◆ Removing:
- Remove operating lever and lock, unhook cable.
- Attach approx. 1000 mm length of cord or similar to cable nipple (operating lever) and pull cable out from engine compartment.
- ◆ Installing:
- Use cord or similar as an aid when inserting.

2 Clip

3 Sealing grommet

4 Self-tapping screw

5 Release lever
- ◆ Cable attached

Protected by copyright. Copying for private or commercial purposes, in part or in whole, is not permitted unless authorised by Volkswagen AG. Volkswagen AG does not guarantee or accept any liability with respect to the correctness of information in this document. Copyright by Volkswagen AG.
satelettronica

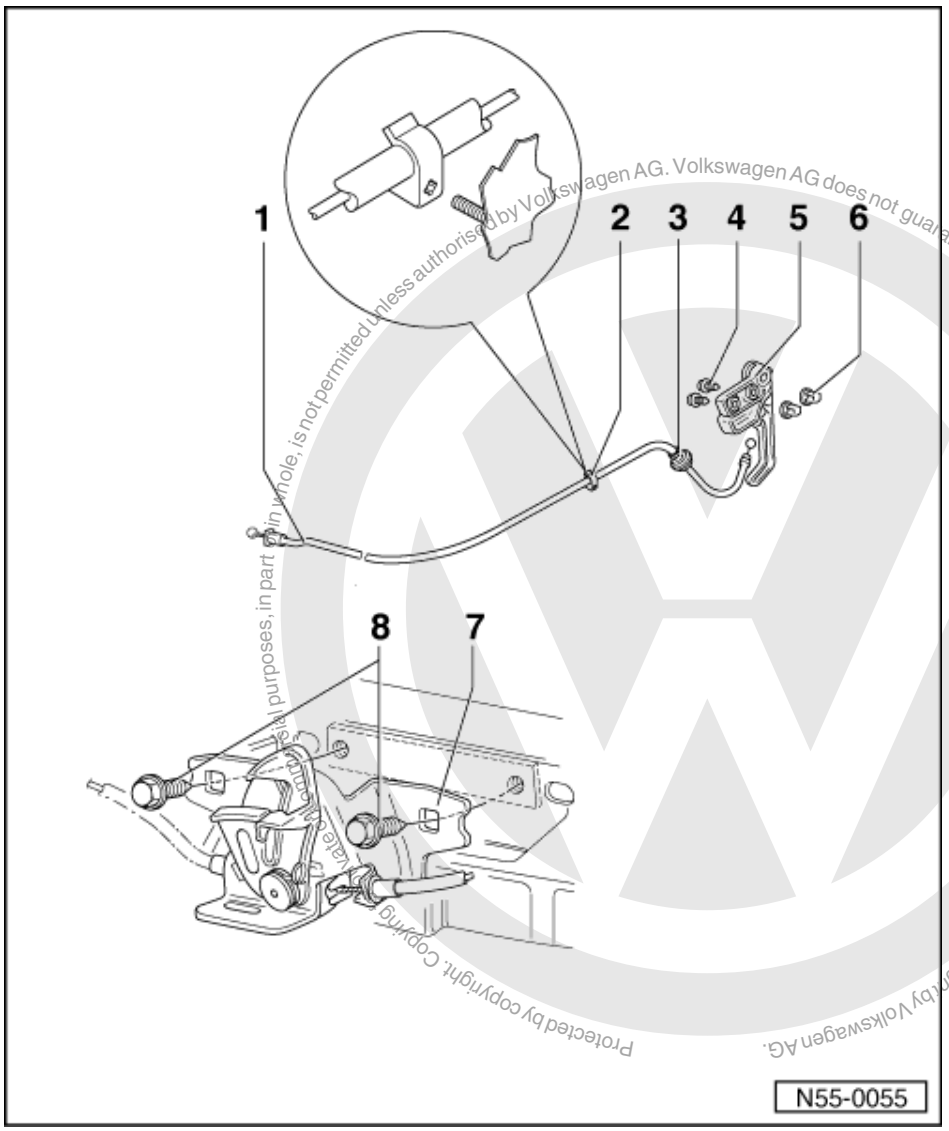

Protected by copyright. Copying for private or commercial purposes, in part or in whole, is not permitted unless authorised by Volkswagen AG. Volkswagen AG does not guarantee or accept any liability with respect to the correctness of information in this document. Copyright by Volkswagen AG.

satelettronica

6 Spreader nut

7 Lock

- Cable attached

8 Hexagon head bolt (self-locking)

- 12 Nm
- When reusing: clean bolt threads with wire brush and nut threads with thread tap; coat bolt with locking fluid D 185 400 A 2.

2 - Rear boot lid/tailgate (Polo Classic, Polo Estate)

2.1 - Rear boot lid/tailgate (Polo Classic, Polo Estate)

2.2 - Tools

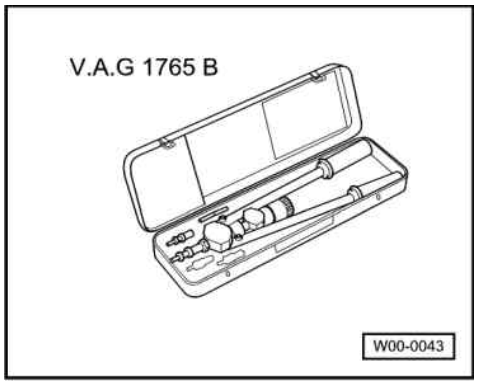

Special tools, workshop equipment, testers, measuring instruments and auxiliary items required

- V.A.G 1765 B Pop-rivet tongues

2.3 - Removing gas strut

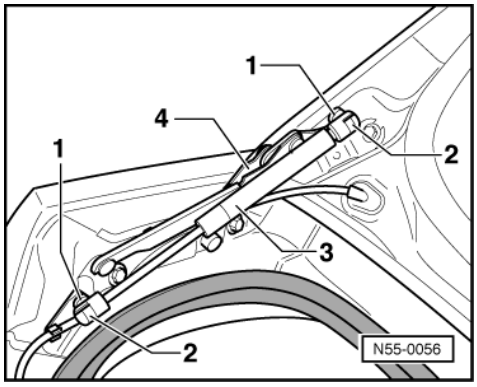

- Support boot lid/tailgate.
- -> Lift retaining clip -2- with a screwdriver and pull gas strut -3- off ball stud -1- on lid hinge -4-.

Note:

If gas strut is to be reused, retaining clip -2- must not be taken out of ball socket completely, otherwise retaining clip will be damaged.

satelettronica
Protected by copyright. Copying for private or commercial purposes, in part or in whole, is not permitted unless authorised by Volkswagen AG. Volkswagen AG does not guarantee or accept any liability with respect to the correctness of information in this document. Copyright by Volkswagen AG.

2.4 - Removing gas strut (Polo Estate)

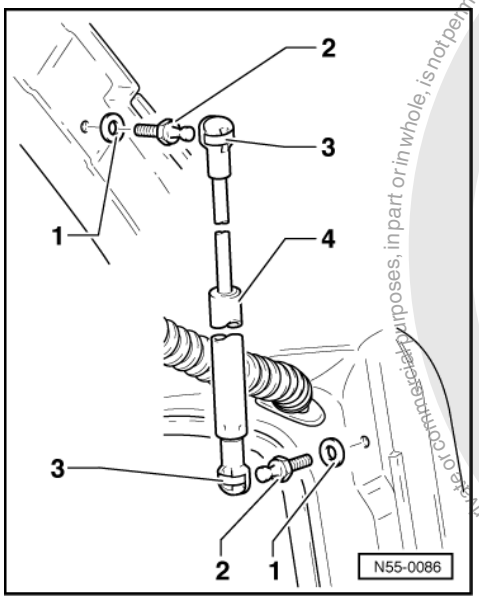

- Support boot lid/tailgate.
- -> Lift retaining clip -3- with a screwdriver and pull gas strut off ball stud -1-.

Note:

If gas-filled strut is to be reused, retainer -3- must not be taken out of ball socket completely, otherwise retainer will be damaged.

1 - Washer
2 - Ball stud, 15 Nm
3 - Retainer
4 - Gas-filled strut

Protected by copyright. Copying for private or commercial purposes, in part or in whole, is not permitted unless authorised by Volkswagen AG. Volkswagen AG does not guarantee or accept any liability with respect to the correctness of information in this document. Copyright by Volkswagen AG.
satelettronica

2.5 - Releasing gas from strut

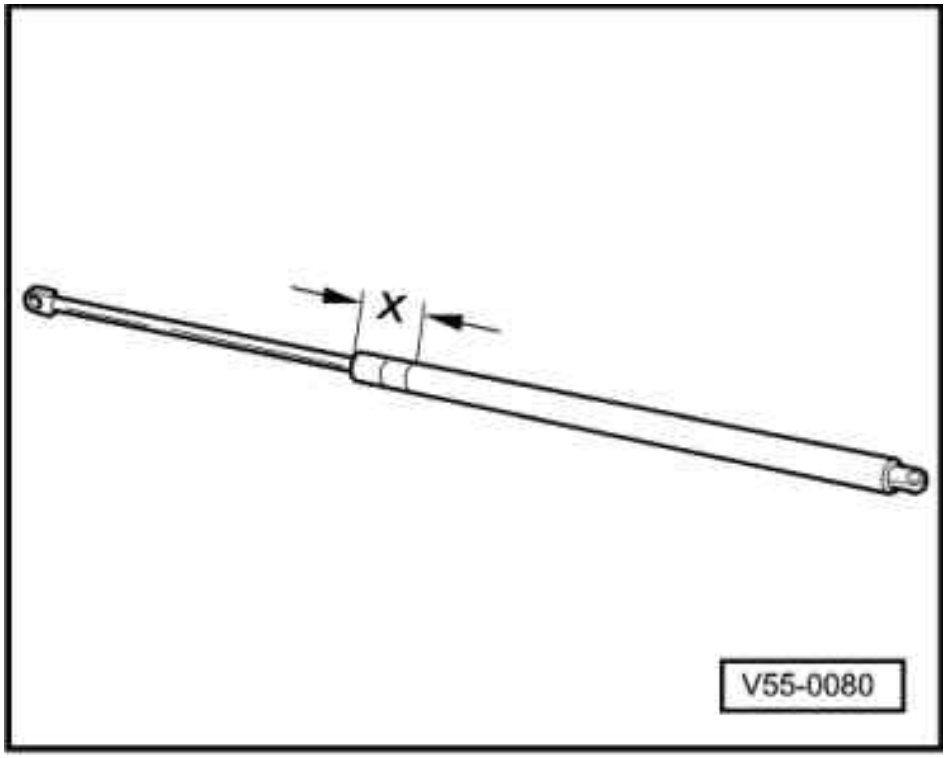

- -> Clamp gas-filled strut in vice in area x = 50 mm.

Warning! Only clamp within this area otherwise danger of accident!

- Saw through cylinder of gas-filled strut within first third of cylinder's overall length using piston rod end of cylinder as reference point.

Note:

- Protective goggles must be worn during sawing process.
- Cover area of saw cut with a cloth.
- Dispose of oil and cloth via existing disposal channels.

2.6 - Adjusting tailgate (Estate)

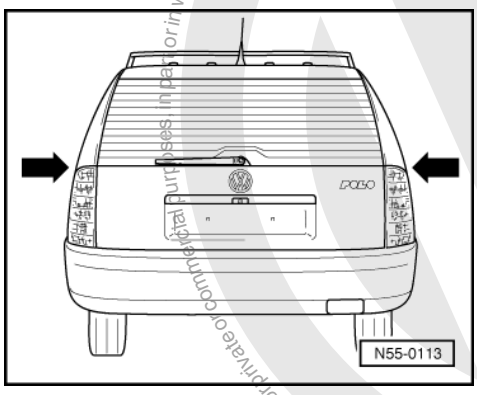

- -> The lid is correctly adjusted if the clearance to the lid opening is even all round when closed, does not project too much to the interior or exterior and the contours align -arrows-.

satelettronica
Protected by copyright. Copyright by Volkswagen AG.
Reproduction for private or commercial purposes, in part or in whole, is not permitted unless authorised by Volkswagen AG. Volkswagen AG does not guarantee or accept any liability with respect to the correctness of information in this document.

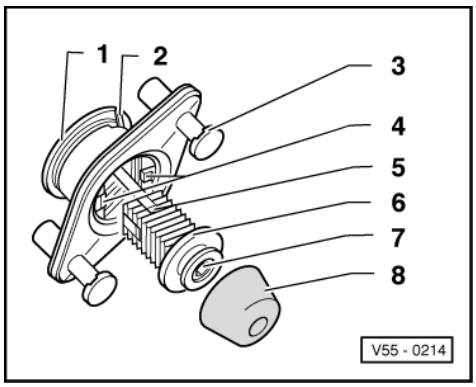

1 - -> Threaded sleeve (with left-hand thread)
2 - Spacer web
3 - Spreader pins with removal slot
4 - Detent lugs for basic setting
5 - Recess for detent lugs
6 - Detent slide
7 - Clamping screw
8 - Rubber buffer

- Lever out spreader pin in dismantling slot with a narrow screwdriver and take adjusting stop out of tailgate.
- Take off rubber buffer and unscrew clamping screw (hexagon socket 3 mm) up to the edge of the detent slot.

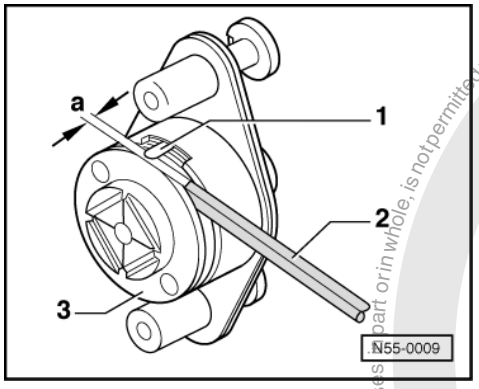

- -> Adjust threaded sleeve -3- (left-hand thread) to a clearance of a = 3 mm. Check clearance, e.g. with hexagon key -2-. Reinstall rubber buffer.

Note:

When new, the adjusting stop should be set to a clearance of 3 mm. The spacer web -1- rests against the threaded sleeve -3-.

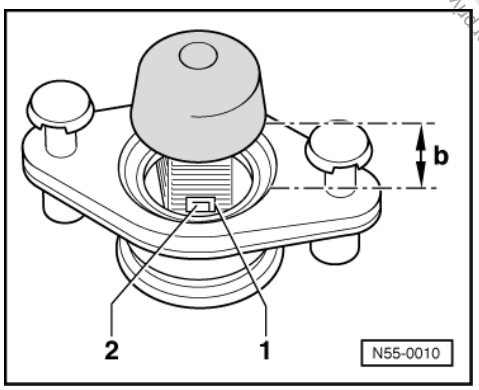

- -> Pull out detent slide and press in again far enough until locking lugs -2- engage in the recess -1-.

Protected by copyright. Copying for private or commercial purposes, in part or in whole, is not permitted unless authorised by Volkswagen AG. Volkswagen AG does not guarantee or accept any liability with respect to the correctness of information in this document. Copyright by Volkswagen AG.
satelettronica

Clearance between housing and rubber buffer: b = 10 mm.

- Insert adjusting stop, press in spreader pins.
- Close tailgate to lock second detent.
- Open tailgate/boot lid again.

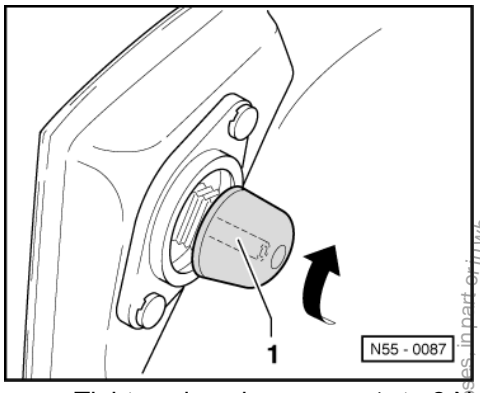

- -> Tighten clamping screw -1- to 2 Nm (torque screwdriver V.A.G 1624).

Protected by copyright. Copying for private or commercial purposes, in part or in whole, is not permitted unless authorised by Volkswagen AG. Volkswagen AG does not guarantee or accept any liability with respect to the correctness of information in this document. Copyright by Volkswagen AG.
satelettronica

2.7 - Removing and installing tailgate/boot lid lock

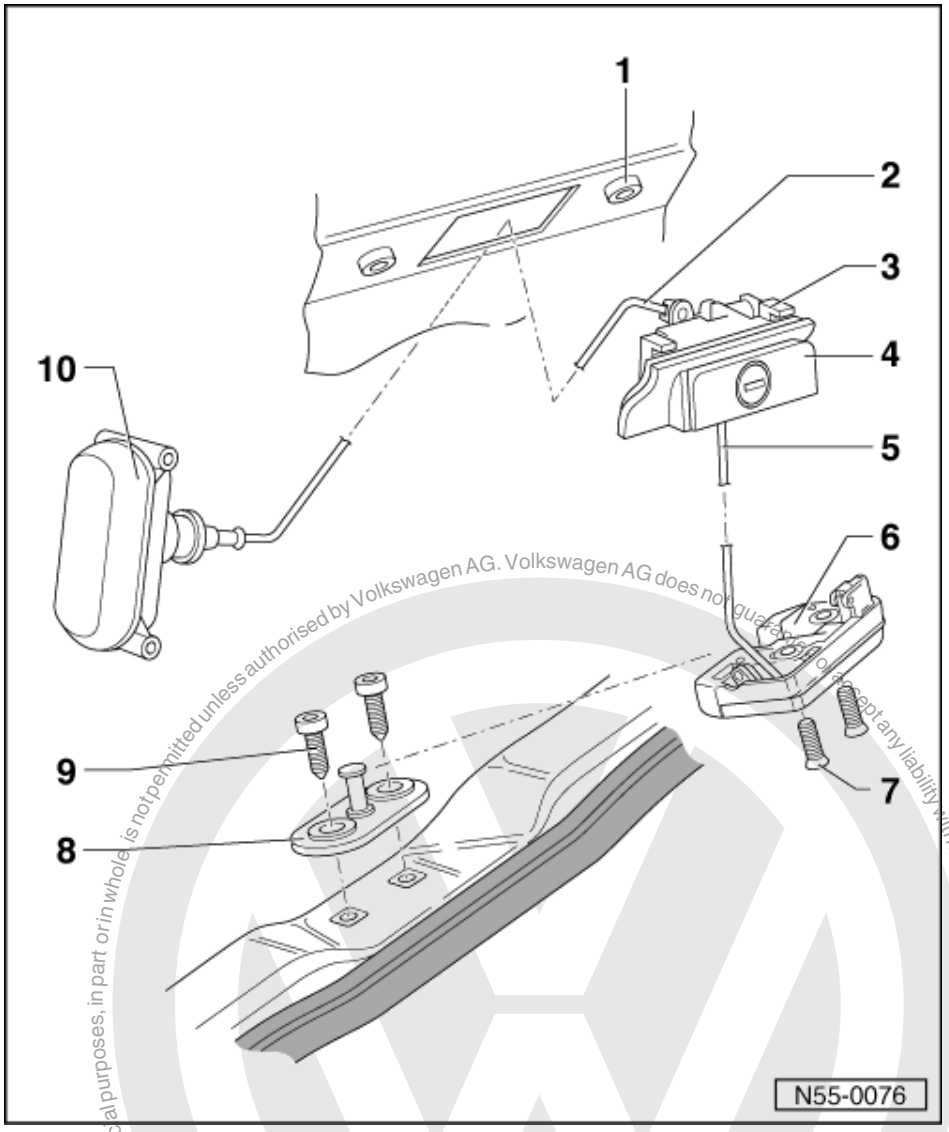

1 Blind rivet nut
- For securing grip strip
- Pull in with pop rivet nut tool V.A.G 1765 A

2 Connecting rod
- Part of boot lid/tailgate positioner

3 Locking lug

4 Push button
- Removing:
- Remove grip strip.
- Remove tailgate/boot lid trim.

=> General body repairs, interior; Repair group 70; Tailgate/boot lid trim Tailgate/boot lid trim

- Unclip pull rod - 5 - and positioning element connecting rod at push button.
- Press locking lugs - 3 - on inside of boot lid/tailgate and take push button out outwards.

Protected by copyright. Copying for private or commercial purposes, in part or in whole, is not permitted unless authorised by Volkswagen AG. Volkswagen AG does not guarantee or accept any liability with respect to the correctness of information in this document. Copyright by Volkswagen AG.
satelettronica

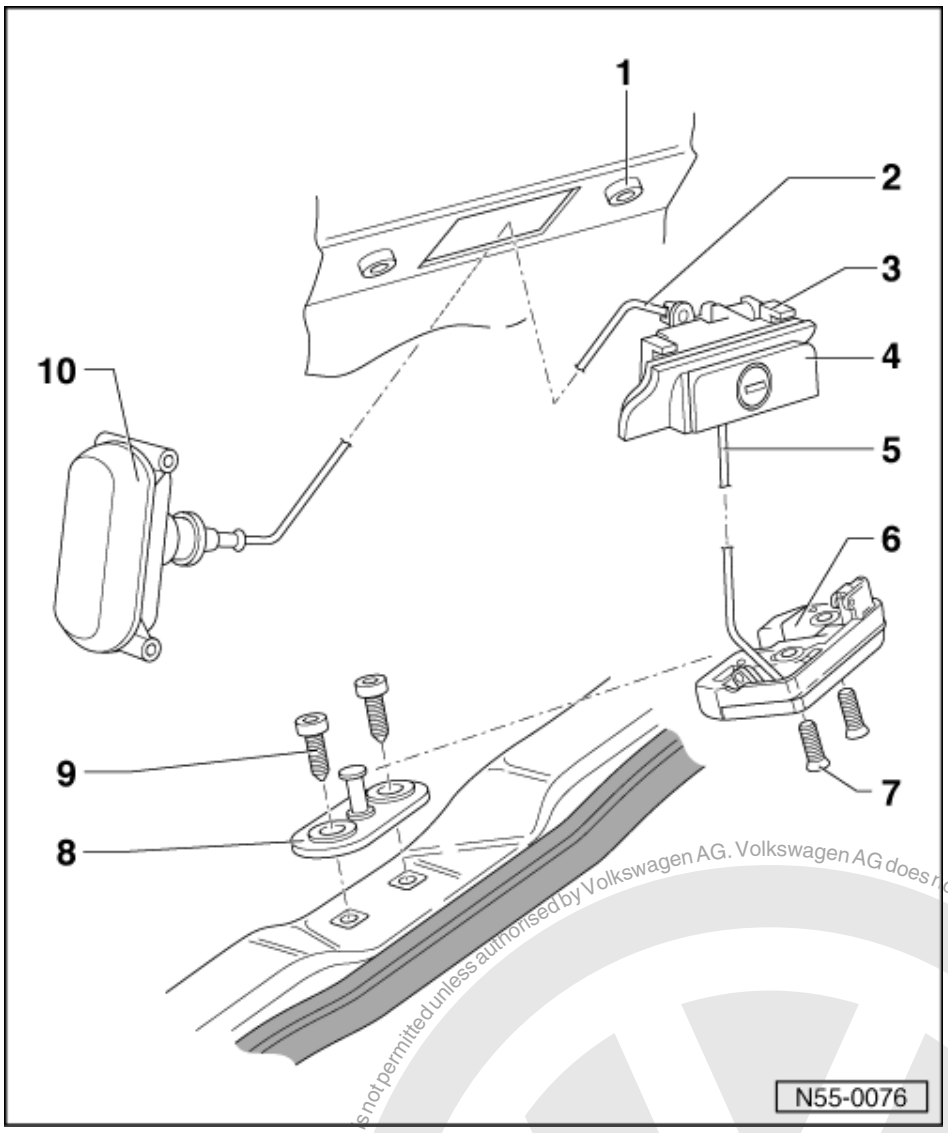

5 Pull rod

6 Lock

7 Bolt
- 20 Nm

8 Locking plate

9 Bolt
- 20 Nm

10 Boot lid/tailgate positioner
- Removing and installing =>Page 54

Protected by copyright. Copying for private or commercial purposes, in part or in whole, is not permitted unless authorised by Volkswagen AG. Volkswagen AG does not guarantee or accept any liability with respect to the correctness of information in this document. Copyright by Volkswagen AG.
satelettronica

2.8 - Removing and installing lock cylinder

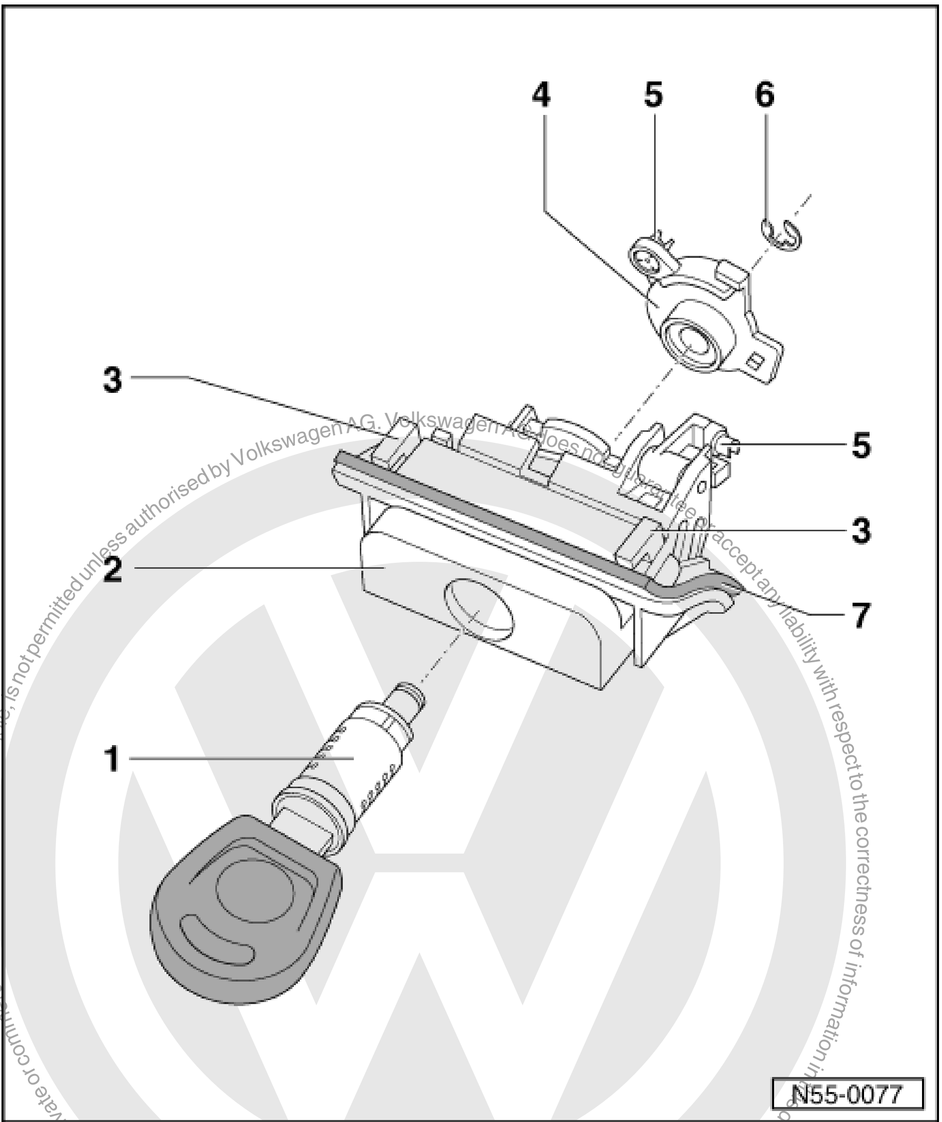

Protected by copyright. Copying for private or commercial purposes, in part or in whole, is not permitted unless authorised by Volkswagen AG. Volkswagen AG does not guarantee or accept any liability with respect to the correctness of information in this document. Copyright by Volkswagen AG.

1 **Lock cylinder**

- ◆ Removing:
- \- Remove tailgate/boot lid trim

=> General body repairs, interior; Repair group 70; Tailgate/boot lid trim Tailgate/boot lid trim

- \- Remove push button - 15 .
- \- Press off circlip - 6 -, relay lever - 4 - and pull out lock cylinder (key must be inserted in lock cylinder).
- ◆ Maintaining common key locking
  => Page 18

2 **Push button**

3 **Locking lug**

4 **Relay lever**

satelettronica

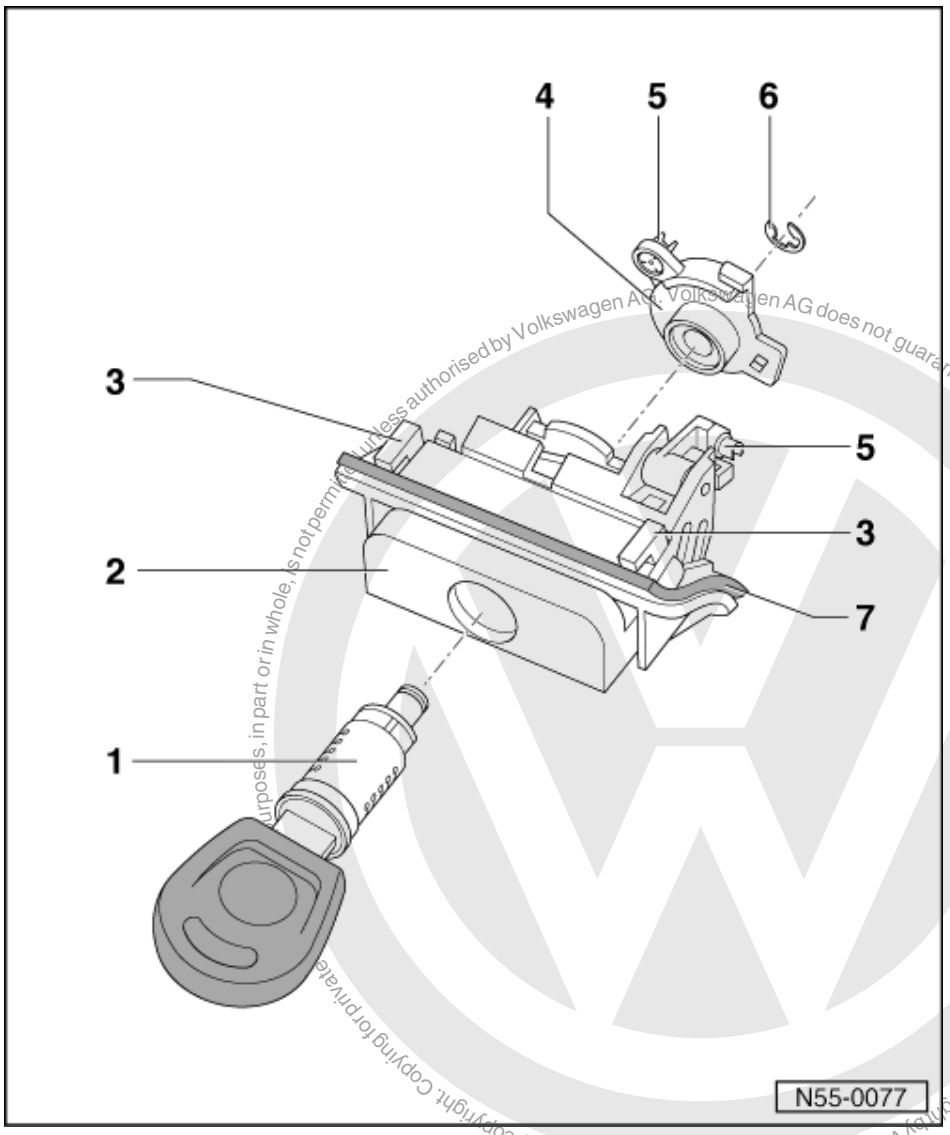

5 Rod clip
6 Circlip
7 Gasket

2.9 - Maintaining common key locking

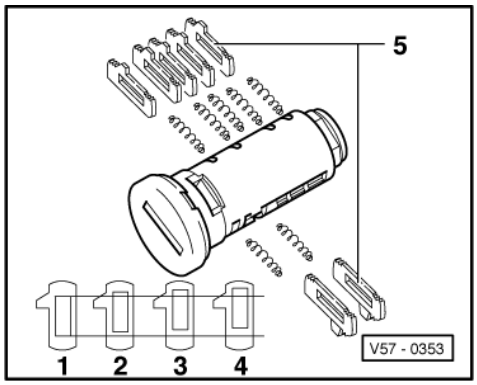

Protected by copyright. Copying for private purposes, in part or in whole, is not permitted unless authorised by Volkswagen AG. Volkswagen AG does not guarantee or accept any liability with respect to the correctness of information in this document. Copyright by Volkswagen AG.
satelettronica

-> Common key locking can be maintained as it is in the vehicle by repositioning or attaching locking plates -5-.
1, 2, 3, and 4 - possible locking plate sizes.
Refer to Special Information Body No. 18, dated 06.89, for additional information.

3 - Tank flap unit

3.1 - Tank flap unit

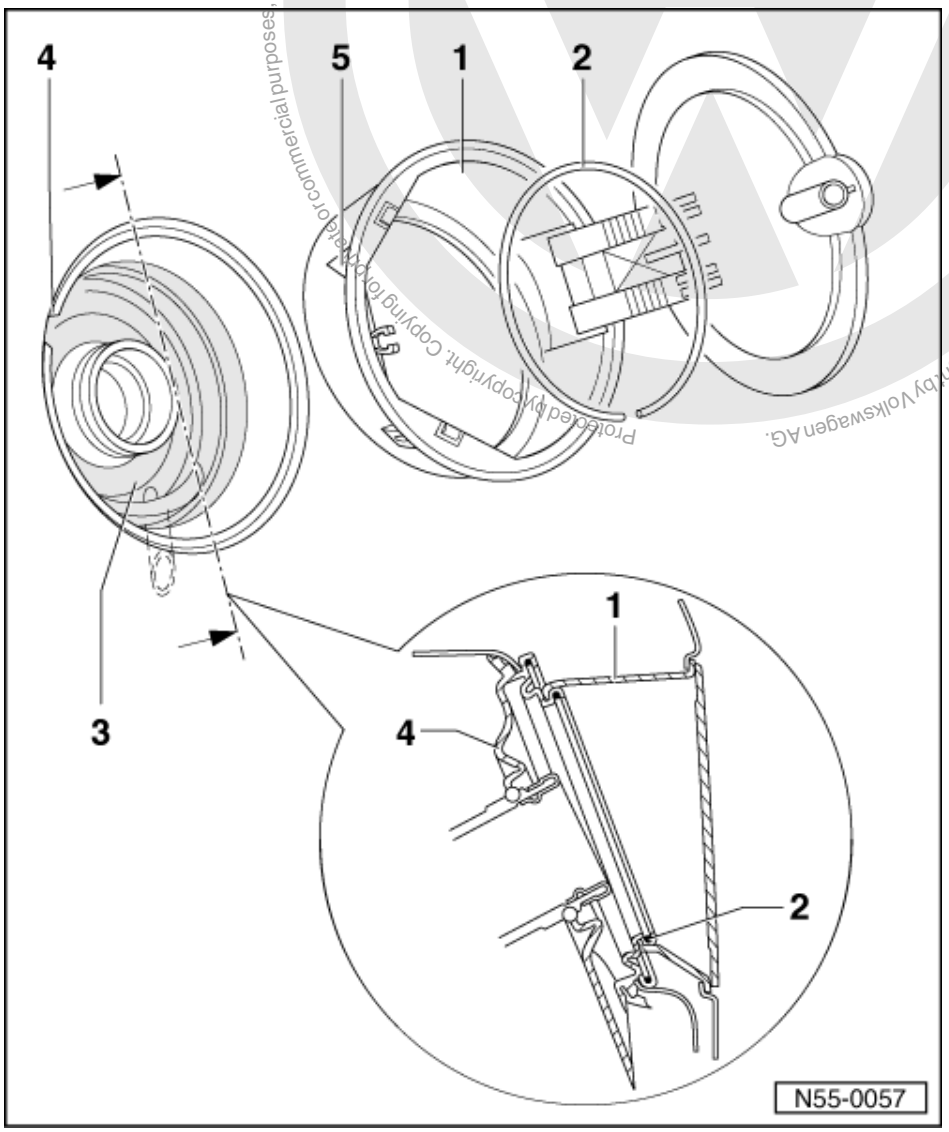

3.2 - Assembly overview (Caddy)

1 Tank flap unit
- Comprised of filler flap and filler flap cup
- Removing and installing => Page 20
- Dismantling and assembling =>Page 21

2 Ring
- Connects rubber cup and tank flap unit

3 Rubber cup

satelettronica

4 Recess
5 Marking
- Must align with body cut-out

3.3 - Tools

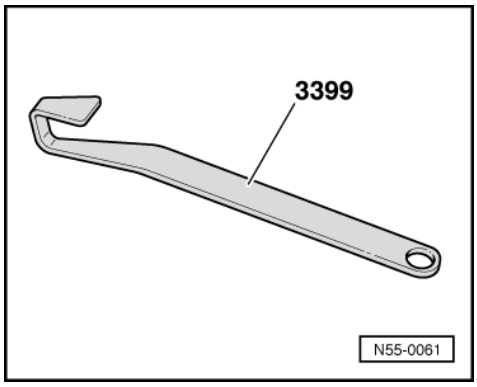

- -> Lever 3399

3.4 - Removing and installing tank flap unit (Caddy)

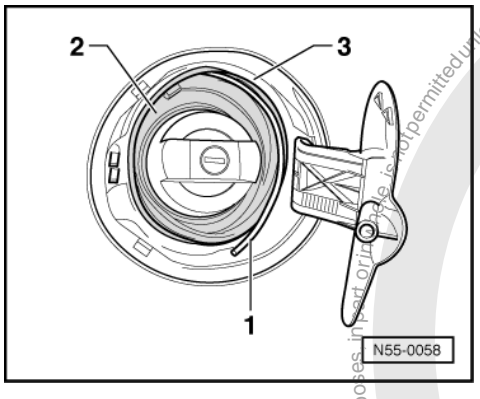

Removing

- -> Remove filler cap.
- Pull ring -1- (behind the sealing lip) out of rubber cup -2-.
- Press rubber cup -2- off the tank flap unit -3- towards centre of vehicle.

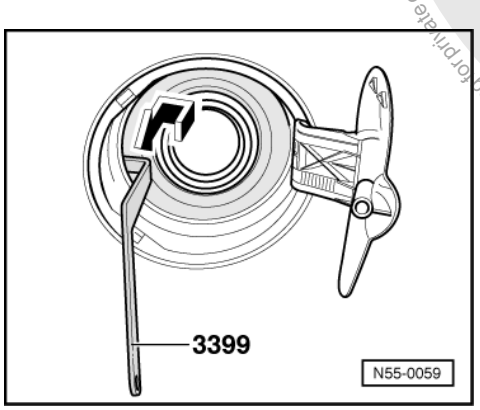

- -> Insert the lever 3399 on the left on the filler neck behind the tank flap unit -arrow-.

Protected by copyright. Copyright by Volkswagen AG. Volkswagen AG does not guarantee or accept any liability with respect to the correctness of information in this document. Copyright by Volkswagen AG.
satelettronica

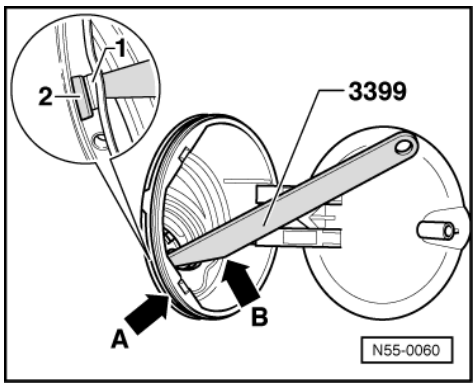

- -> Then align the assembly lever over the left recess -arrow A-.
- Now push the retaining lug -1- carefully towards the tank flap unit with the lever -2-.
- To do this support lever -2- on the offset -arrow B- with the right hand, and press from rear to centre with the other hand.
- Pull tank flap unit forward slightly releasing the catch.

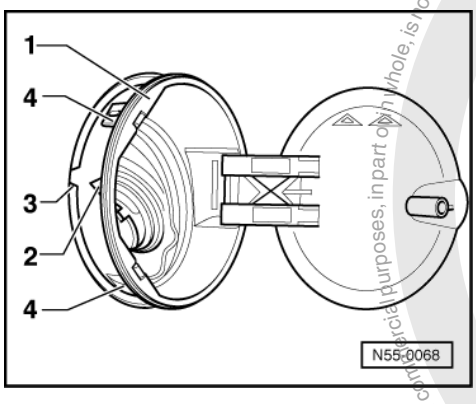

Installing

- -> Insert tank flap unit -1- and press respective marking -2- and recess -3- into body cut-out until locking lugs -4- engage.
- Then fit rubber cup and ring. Screw on filler cap.

3.5 - Dismantling and assembling tank flap unit (Caddy)

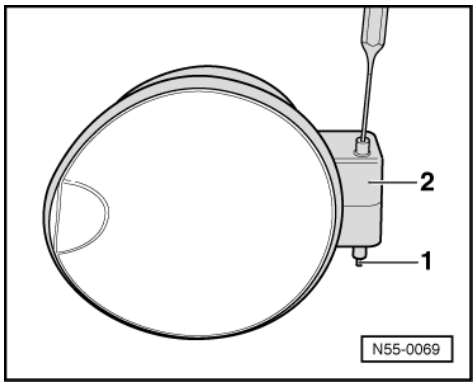

Dismantling

- -> Push pin -1- out of tank flap unit -2- with a punch .
- Remove tank flap from tank flap unit.

Protected by copyright. Copying for private or commercial purposes, in part or in whole, is not permitted unless authorised by Volkswagen AG. Volkswagen AG does not guarantee or accept any liability with respect to the correctness of information in this document. Copyright by Volkswagen AG.
satelettronica

Protected by copyright. Copyright by Volkswagen AG. Volkswagen AG does not guarantee or accept any liability with respect to the correctness of information in this document. Copyright by Volkswagen AG. Commercial purposes, in part or in whole, is not permitted unless authorised by Volkswagen AG.

Assembling

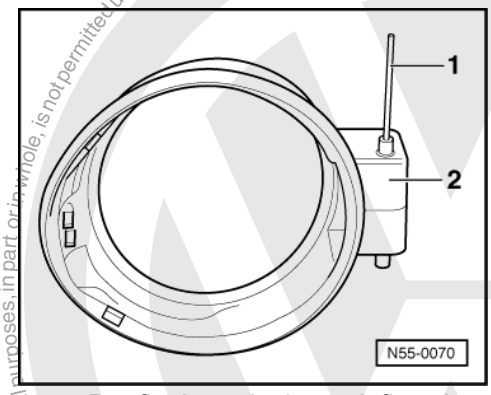

-> Pre-fit pin -1- in the tank flap sleeve -2-.

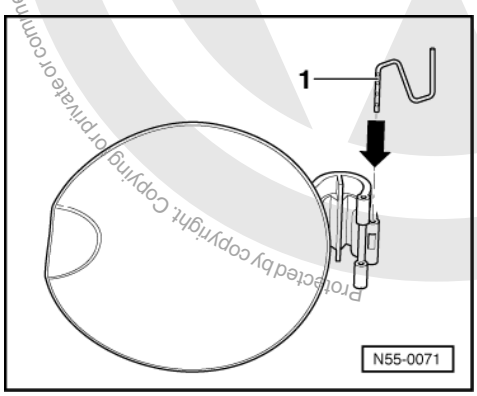

- -> Hook spring -1- in tank flap.

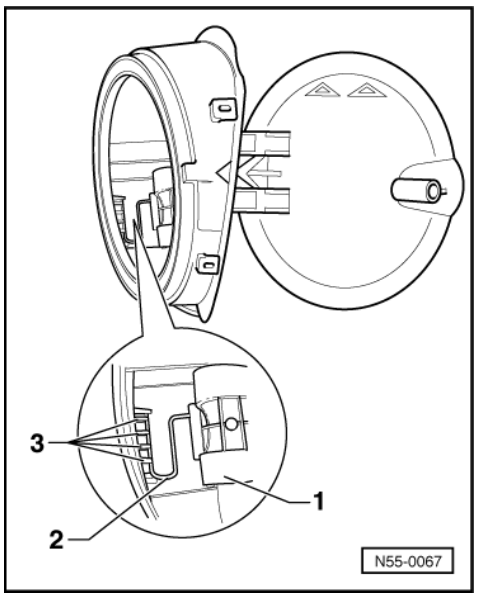

- -> Insert tank flap -1- into tank flap sleeve with the spring -2- behind the locating lugs -3-.
- Close tank flap and push pin in.
- Check function of tank flap.
- Installing tank flap unit => Page 21 .

satelettronica

57 - Front doors/Door components/Central locking system

1 - Front door

1.1 - Front door

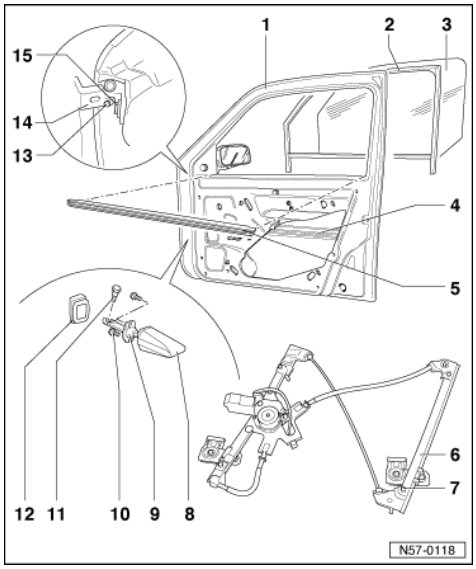

1.2 - Front door - assembly overview

1 Door
- Removing and installing => Page 25
- Adjusting => Page 26

2 Window channel
- Buttoned into window frame

3 Door window
- Removing =>Page 148
- Adjusting => Page 148

4 Side impact member
- Integrated in door

5 Window slot seal
- Pushed onto flange

Protected by copyright. Copying for private or commercial purposes, in part or in whole, is not permitted unless authorised by Volkswagen AG. Volkswagen AG does not guarantee or accept any liability with respect to the correctness of information in this document. Copyright by Volkswagen AG.
satelettronica

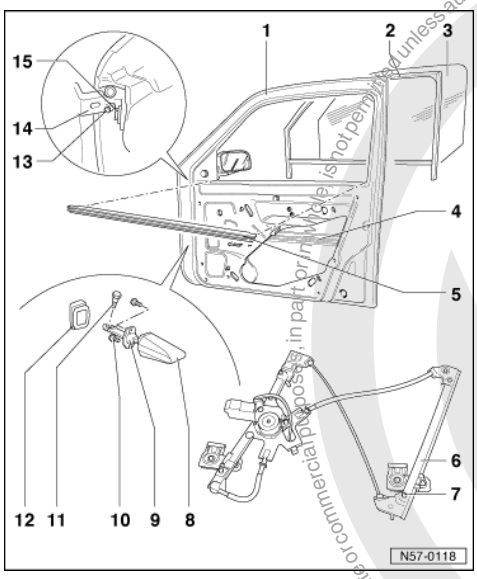

6 Window lifter
- Removing and installing =>Page 149

7 Bolt
- 10 Nm

8 Door check strap sleeve

9 Door arrester

10 Bolt
- 7.5 Nm

11 Threaded pin
- 6.5 Nm

12 Door check strap cover
- Self-adhesive - stuck onto A pillar

13 Grub screw
- 23 Nm (▸09.99)
- 30 Nm (10.99 ▸)

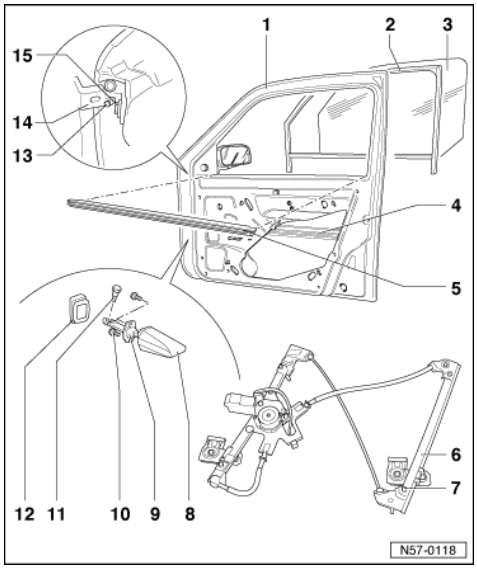

14 Door hinge
- Bolted to door and A-pillar. Hinge pin inserted into box section and secured with grub screw

15 Bolt

Protected by copyright. Copying for private or commercial purposes, in part or in whole is not permitted unless authorised by Volkswagen AG. Volkswagen AG does not guarantee or accept any liability with respect to the correctness of information in this document. Copyright by Volkswagen AG.
satelettronica

- 36 Nm

1.3 - Tools

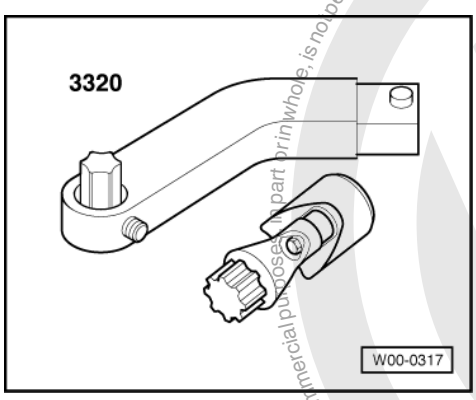

- Adjustment wrench 3320 combined with Torx bit for loosening securing screws on door hinge, A-pillar.

1.4 - Removing and installing door

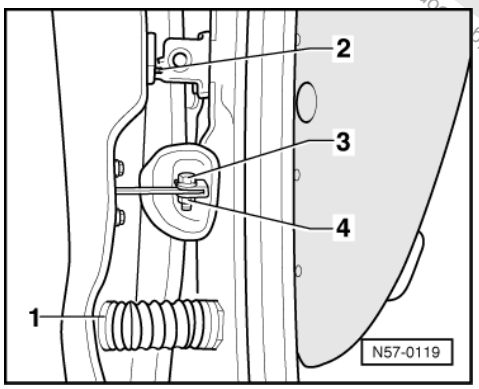

- -> Disconnect multi-pin plug -1- on A-pillar. Also disconnect bi-pressure pipe in multiple-pin plug on vehicles with central locking (discontinued version only).
- Remove bolt -3- from welded nut -4-.
- Lever off cover cap -2- with screwdriver.
- Remove grub screw from upper and lower hinges.
- Grub screw tightening torque = 23 Nm (▸09.99) or 30 Nm (10.99▸).
- Lift door upwards out of hinge brackets.

Protected by copyright. Copyright by Volkswagen AG. Volkswagen AG does not guarantee or accept any liability with respect to the correctness of information in this document. Copyright by Volkswagen AG. Volkswagen AG. is not permitted unless authorised by Volkswagen AG. Volkswagen AG does not guarantee or accept any liability with respect to the correctness of information in this document. Copyright by Volkswagen AG.
satelettronica

1.5 - Adjusting door

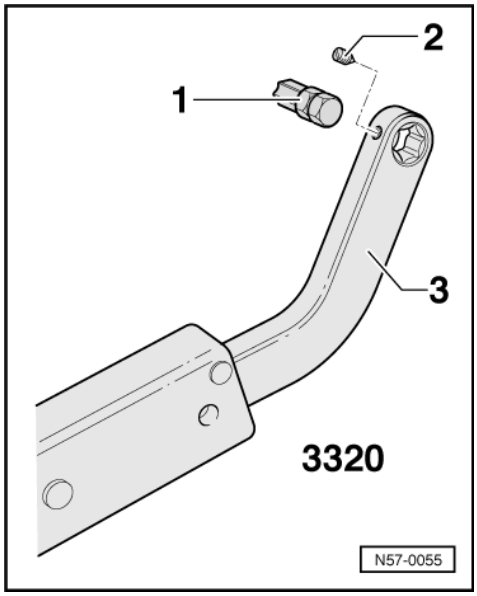

To ensure a correct door adjustment the door hinges on the pillar must be loosened. Other measures such as raising the door upwards have no effect. Overpressuring thereafter will again cause the door to sack.

-> Special tool 3320 -3- in conjunction with torx bit T 45 to loosen securing bolts on A pillar lower door hinge.

1 - Bit insert (reposition for left and right-hand sides)
2 - Grub screw

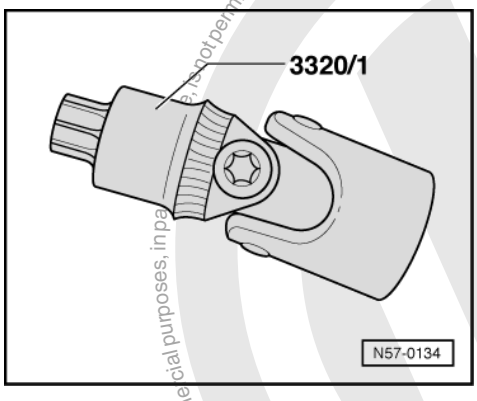

-> Special tool 3320/1 to loosen securing bolts on A pillar upper door hinge.

Adjusting

- The doors are correctly adjusted if the clearance to the door opening when closed is even all round, does not project too much to the inside or outside and the contours align.

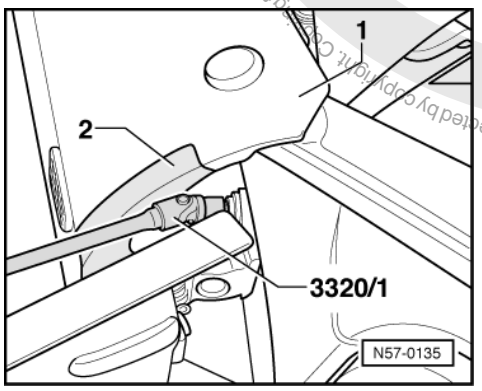

Protected by copyright. Copyright by Volkswagen AG.
Copyright by Volkswagen AG. Volkswagen AG does not guarantee or accept any liability with respect to the correctness of information in this document.
satelettronica

- -> Mask wing -1- and door in area of upper hinge with textile reinforced adhesive tape -2- to prevent damage to paintwork.
- Loosen bolts on the upper hinge using special tool 3320/1 only so far as to allow the hinge to be moved with the door still fitted.

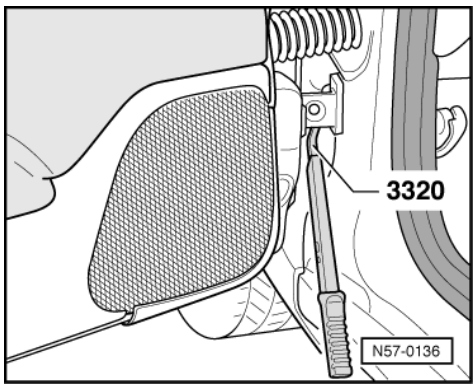

- -> Loosen bolts on lower hinge using special tool 3320 with a short bit insert only so far as to allow the hinges to be moved with the door still fitted.
- Set gaps/shut lines by moving door within over-sized holes (2nd mechanic).
- Tighten door hinge bolts
  Tightening torque: 36 Nm.

Note:

When using the special tool the tightening torque is to be reduced by 2 Nm to 34 Nm.

- Check adjustment and repeat sequence if necessary.

The paint structure must be restored and, if necessary, anti-corrosion measures must be carried out.

Protected by copyright. Copying for private or commercial purposes, in part or in whole, is not permitted unless authorised by Volkswagen AG. Volkswagen AG does not guarantee or accept any liability with respect to the correctness of information in this document. Copyright by Volkswagen AG.
satelettronica

1.6 - Door handle - Assembly overview

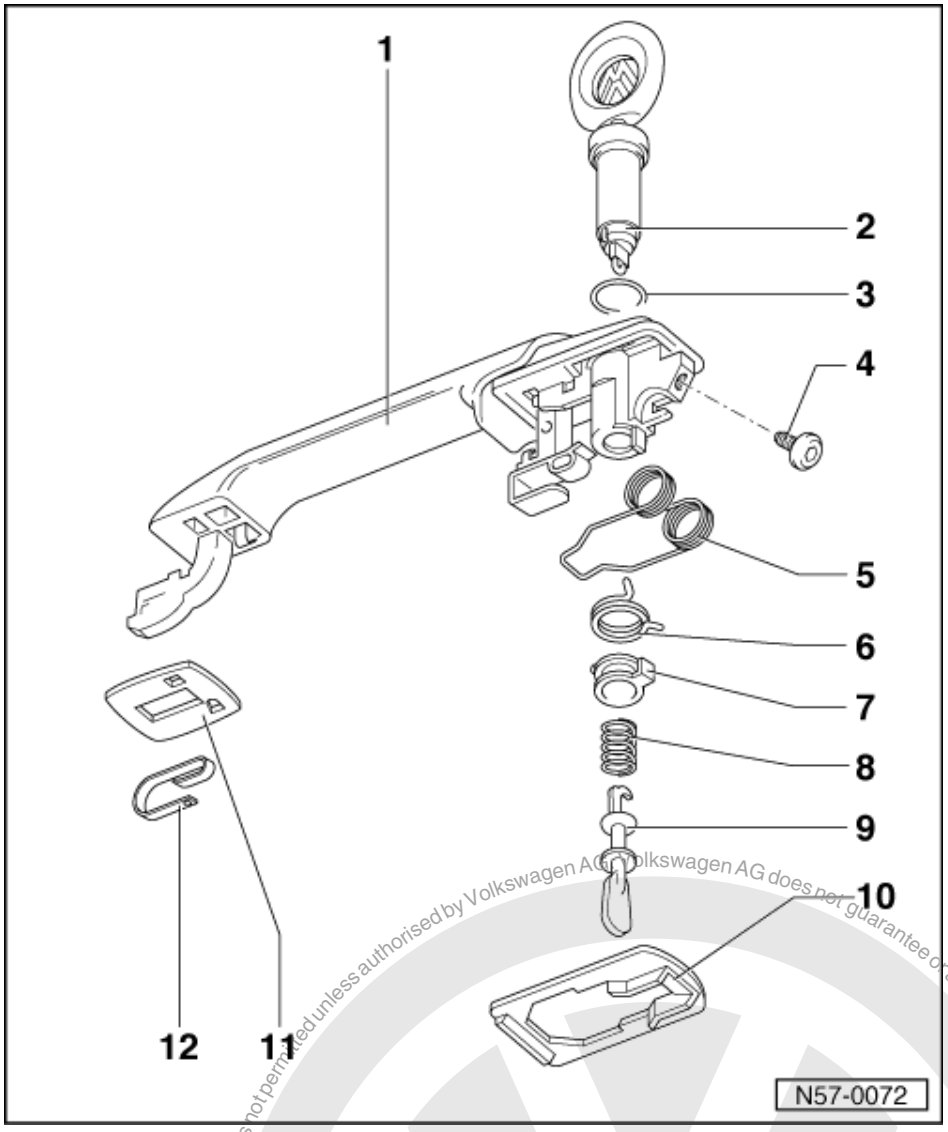

1 Door handle
- Removing and installing => Page 30

2 Lock cylinder
- Press out carefully only with key inserted.
- Common key locking can be maintained in vehicle by repositioning or attaching locking plates.
- Maintaining common key locking => Page 31
- Prior to installation, lubricate lock cylinder with G 000 400

3 Seal

4 Bolt
- 8 Nm

Protected by copyright. Copying for private or commercial purposes, in whole or in part, is not permitted unless authorised by Volkswagen AG. Volkswagen AG does not guarantee or accept any liability with respect to the correctness of information in this document. Copyright by Volkswagen AG.
satelettronica

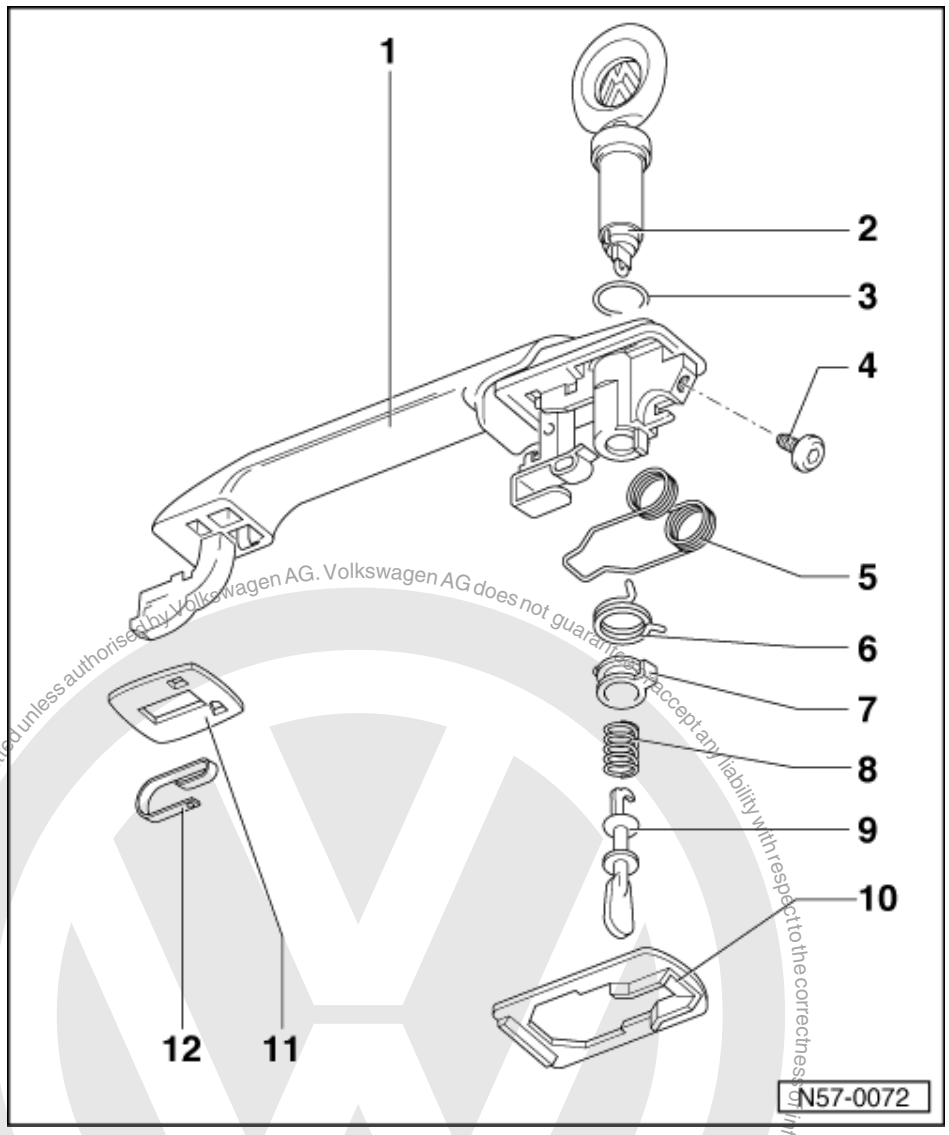

5 Spring
6 Coupling plate spring
7 Coupling plate
8 Connecting rod spring
9 Connecting rod
◆ Hooked into lock cylinder
10 Backing
11 Backing
12 Leaf spring

Protected by copyright. Copying for private or commercial purposes, in part or in whole, is not permitted unless authorised by Volkswagen AG. Volkswagen AG does not guarantee or accept any liability with respect to the correctness of information in this document. Copyright by Volkswagen AG.
satelettronica

1.7 - Removing and installing door handle

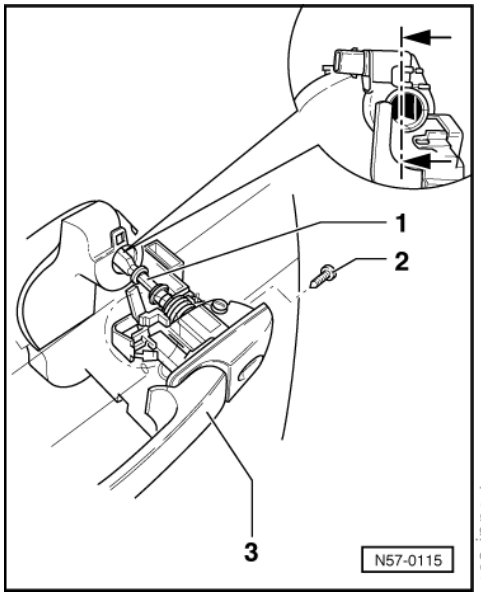

Removing

- -> Remove screw -2-.
- Slide door handle -3- forwards and pivot door handle out of door.

Installing

Install in reverse order.

Vehicles with central locking, the carrier for the connecting rod -1- must be in vertical position -arrows- before inserting the door handle.

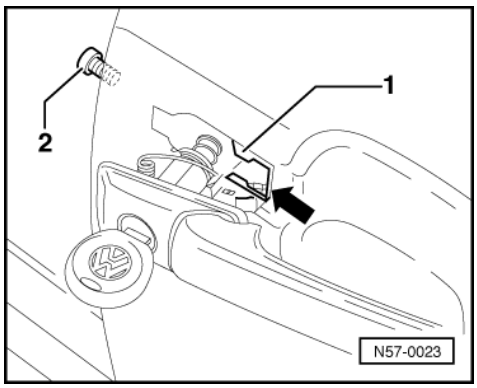

- -> Check clip -1- for damage and renew if necessary.
- Pivot in door handle so that the door handle slides past the door panel without clearance -arrow-.
- Screw in Torx screw -2-.
  Tightening torque: 8 Nm.

Protected by copyright. Copying for private or commercial purposes, in part or in whole, is not permitted unless authorised by Volkswagen AG. Volkswagen AG does not guarantee or accept any liability with respect to the correctness of information in this document. Copyright by Volkswagen AG.
satelettronica

1.8 - Removing inner release handle

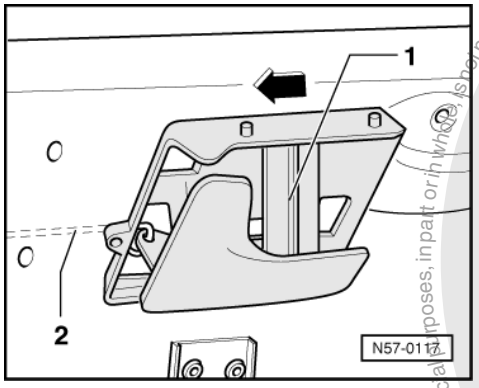

- Remove door trim.

=> General body repairs, interior; Repair group 70; Door trim Door trim

- -> Slide inner release handle -1- to rear -arrow- and pull out of securing holes.
- Unhook rod -2-.

1.9 - Maintaining common key locking

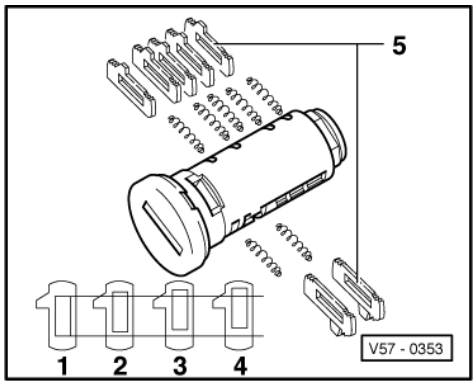

-> Common key locking can be maintained as it is in the vehicle by repositioning or attaching locking plates -5-.

1, 2, 3, and 4 - possible locking plate sizes.

Refer to Special Information Body No. 18, dated 06.89, for additional information.

Protected by copyright. Copying for private or commercial purposes, in part or in whole, is not permitted unless authorised by Volkswagen AG. Volkswagen AG does not guarantee or accept any liability with respect to the correctness of information in this document. Copyright by Volkswagen AG.
satelettronica

1.10 - Door lock - Assembly overview

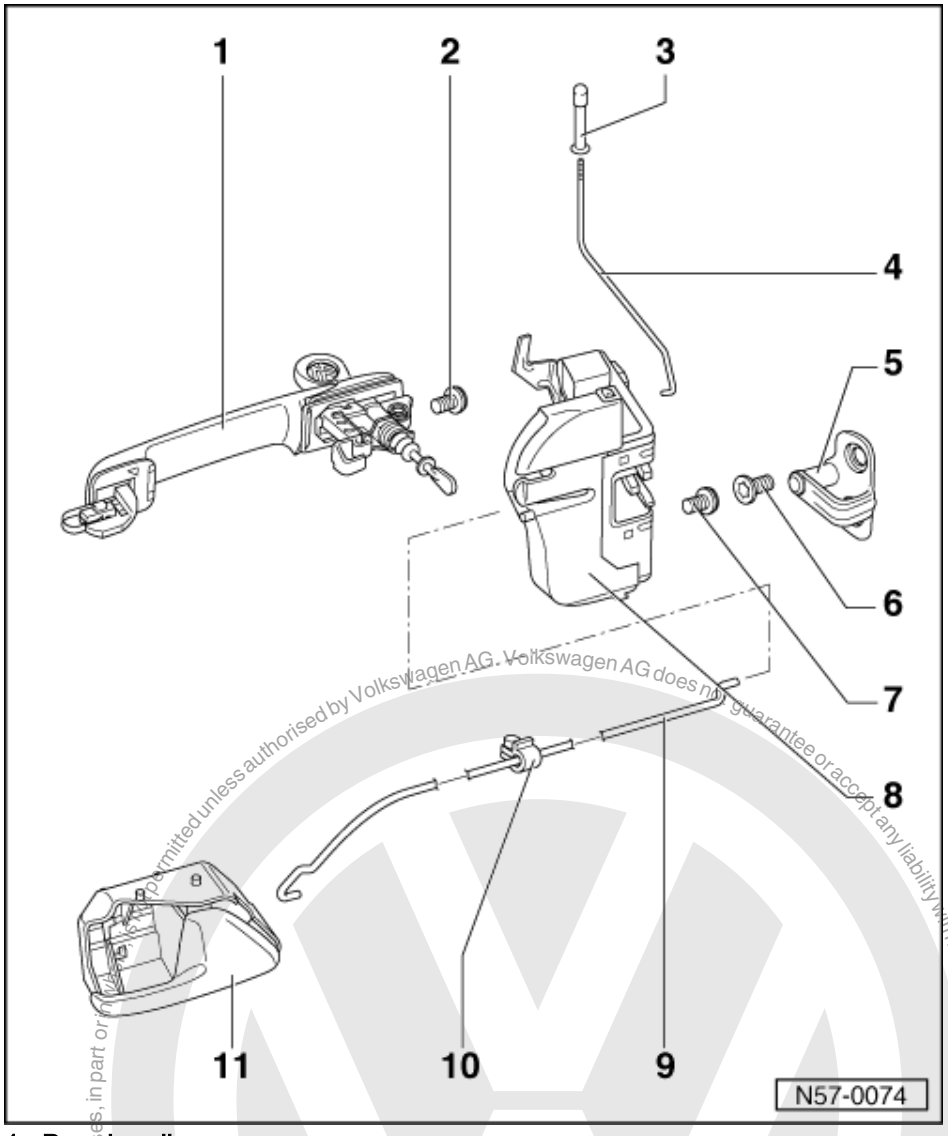

1 Door handle
- Removing and installing => Page 30
- Lubricate with G 000 400 prior to installation

2 Bolt
- 8 Nm

3 Locking button
- Screwed on

4 Locking rod

5 Striker pin

6 Bolt
- 20 Nm

Protected by copyright. Copying for private or commercial purposes, in part or in whole, is not permitted unless authorised by Volkswagen AG. Volkswagen AG does not guarantee or accept any liability with respect to the correctness of information in this document. Copyright by Volkswagen AG.

satelettronica

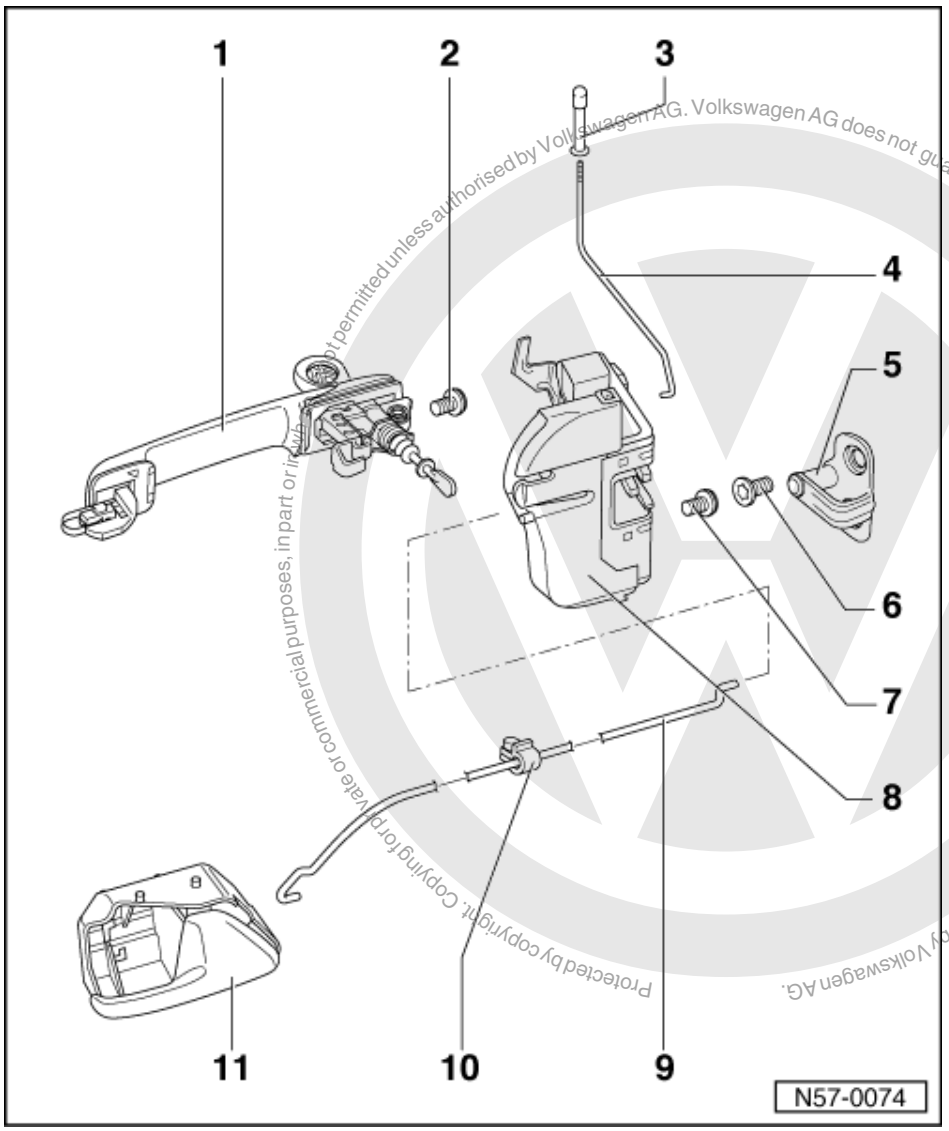

Protected by copyright. Copying for private or commercial purposes, in part or in whole, is not permitted unless authorised by Volkswagen AG. Volkswagen AG does not guarantee or accept any liability with respect to the correctness of information in this document. Copyright by Volkswagen AG.

satelettronica

7 Bolt
- 8 Nm

8 Door lock
- Removing and installing => Page 33
- To remove and install, the window and the rear window lifter strut must be removed.

9 Pull rod

10 Clip

11 Interior release handle
- Removing =>Page 31

1.11 - Removing and installing door lock

Removing

- Remove door handle.
- Remove door trim and door insulation sheeting.

=> General body repairs, interior; Repair group 70; Door trim Door trim

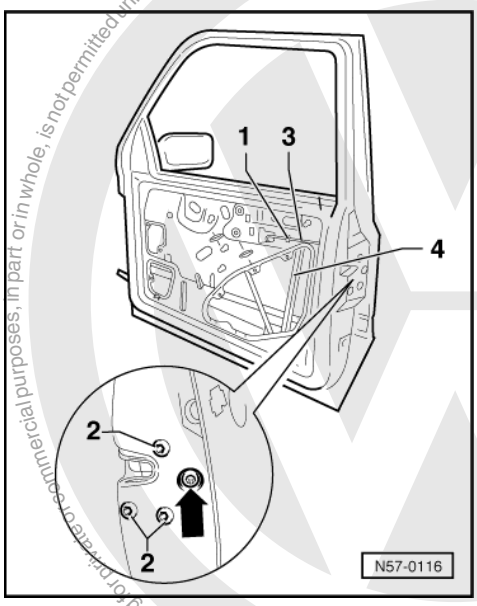

- Remove door window => Page 148 .
- -> Remove bolts -2-
  Tightening torque: 8 Nm.
- Loosen window lifter rearmost strut -4- securing bolts and slide window lifter strut forwards.
- Unclip rod clip -1-, take door lock with pull rod -3- out through installation opening.
- On vehicles with central locking pull off pressure line and separate connector.

Installing

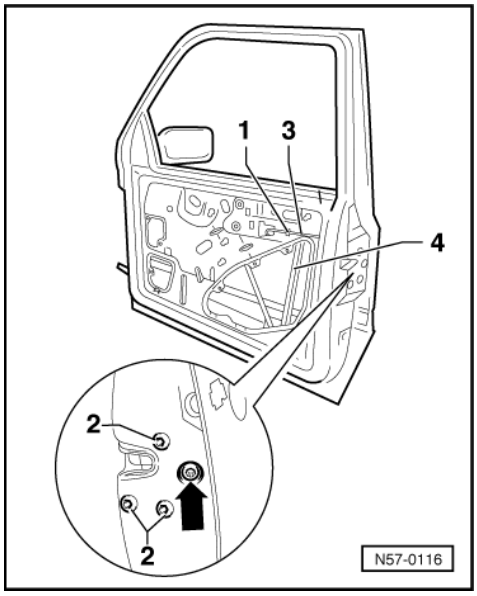

Install in reverse order.

- -> Loosen adjusting screw -arrow- prior to installing door lock.

After installing lock/handle, tighten adjustment screw (adjustment screw tightening torque = 3 Nm).

Left-hand lock - right-hand thread
Right-hand lock - left-hand thread

The adjustment is carried out by tightening the adjusting screw.

satelettronica

2 - Central locking

2.1 - Central locking

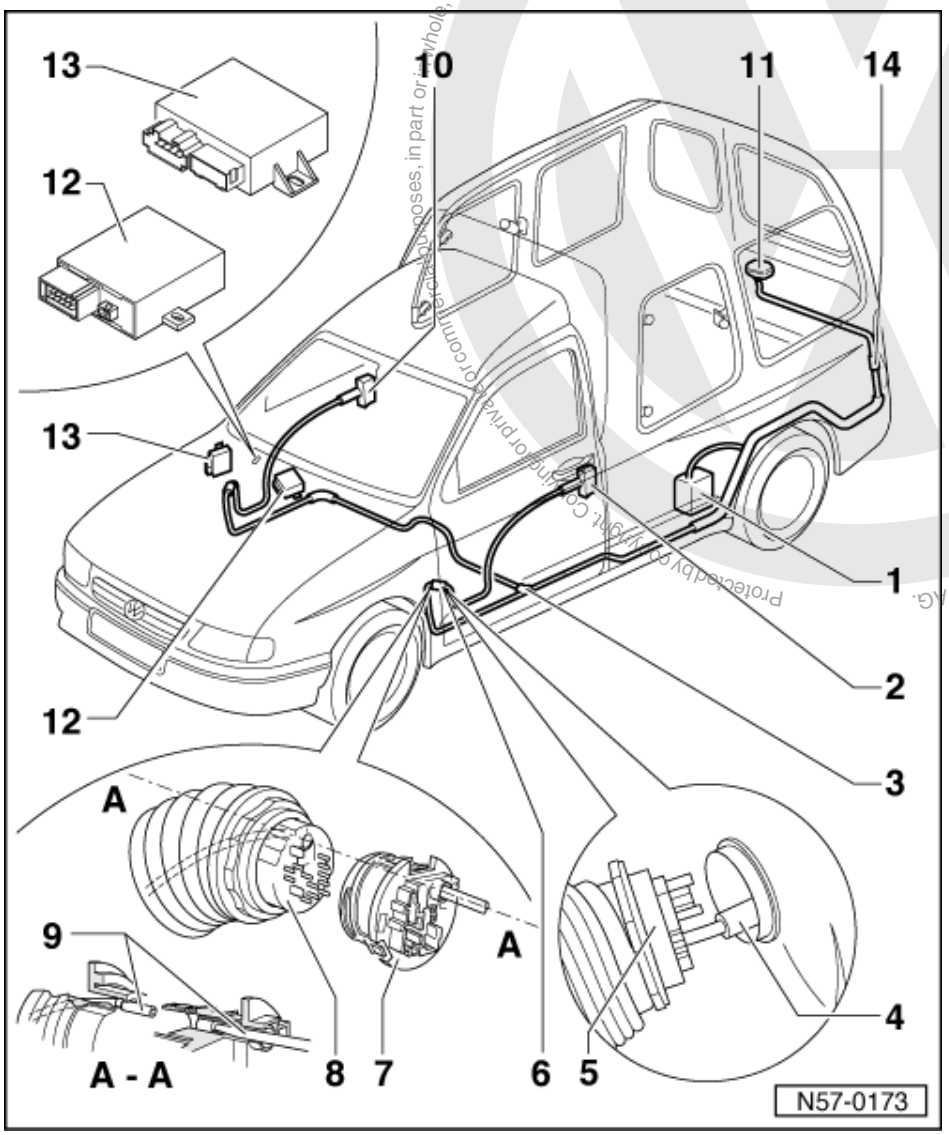

2.2 - Central locking - Assembly overview (Caddy)

Note:

New coupling and junction piece for pipe connections => Page 46 .

1 Bi-pressure pump
- Removing and installing => Page 47

2 Front door lock positioning element
- Removing and installing => Page 50

3 T-piece
- Fitting location: B pillar/sill, covered by sill trim

Protected by copyright. Copying for private or commercial purposes, in part or in whole, is not permitted unless authorised by Volkswagen AG. Volkswagen AG does not guarantee or accept any liability with respect to the correctness of information in this document. Copyright by Volkswagen AG.
satelettronica

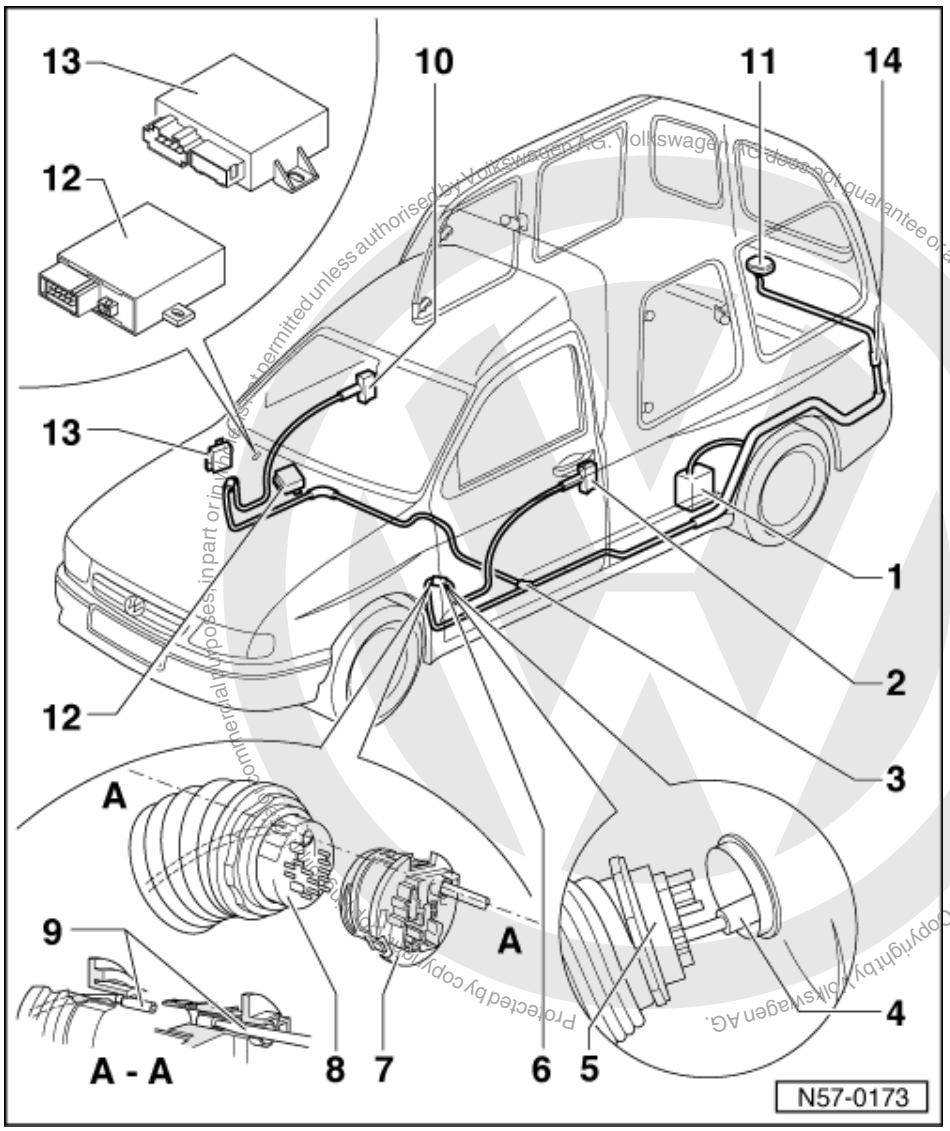

4 Pipe connector
- If the connector is located in the multi-pin connector, then the multi-pin connector must be separated to dismantle and assemble

5 Multi-pin connector

6 Pipe connector
- Discontinued version - 4 - and - 5 -
- New version - 7 -, - 8 - and - 9 -

7 A pillar connector piece

8 Door connector piece
- With bellows and union nut

9 Pipe connector
- Engages in connectors

10 Front door positioning element
- Removing and installing => Page 50

satelettronica

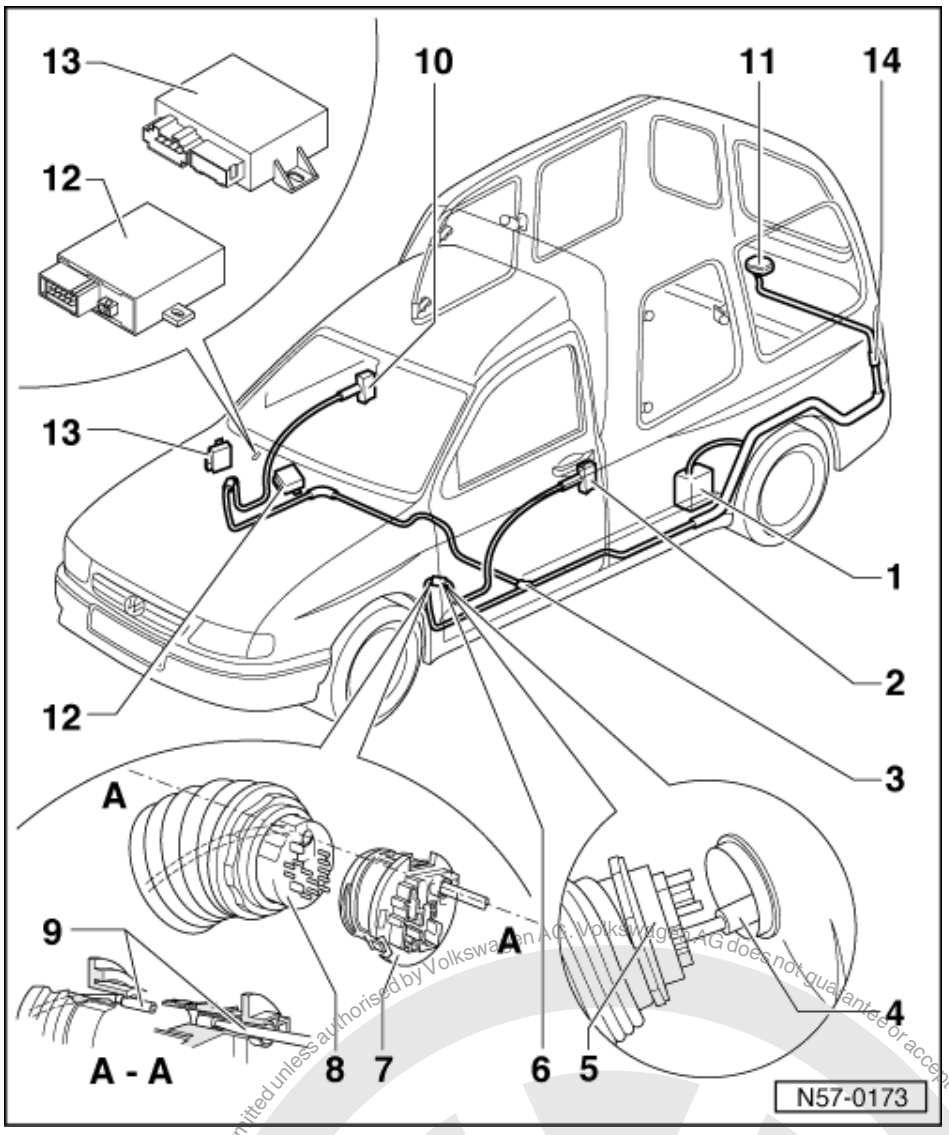

11 Rear door lock positioning element
- Removing and installing => Page 52

12 Central locking remote release control unit (J276)
- Optional equipment for central locking
- Behind front passenger's airbag or behind shelf below dash panel

13 Anti-theft alarm control unit (J284)
- Optional equipment

14 Pipe connector
- Fitting location: D pillar, covered by interior trim in vicinity of tail light cluster

Protected by copyright. Copying for private or commercial purposes, in part or in whole, is not permitted unless authorised by Volkswagen AG. Volkswagen AG does not guarantee or accept any liability with respect to the correctness of information in this document. Copyright by Volkswagen AG.
satelettronica

2.3 - Central locking - Assembly overview (Polo Classic)

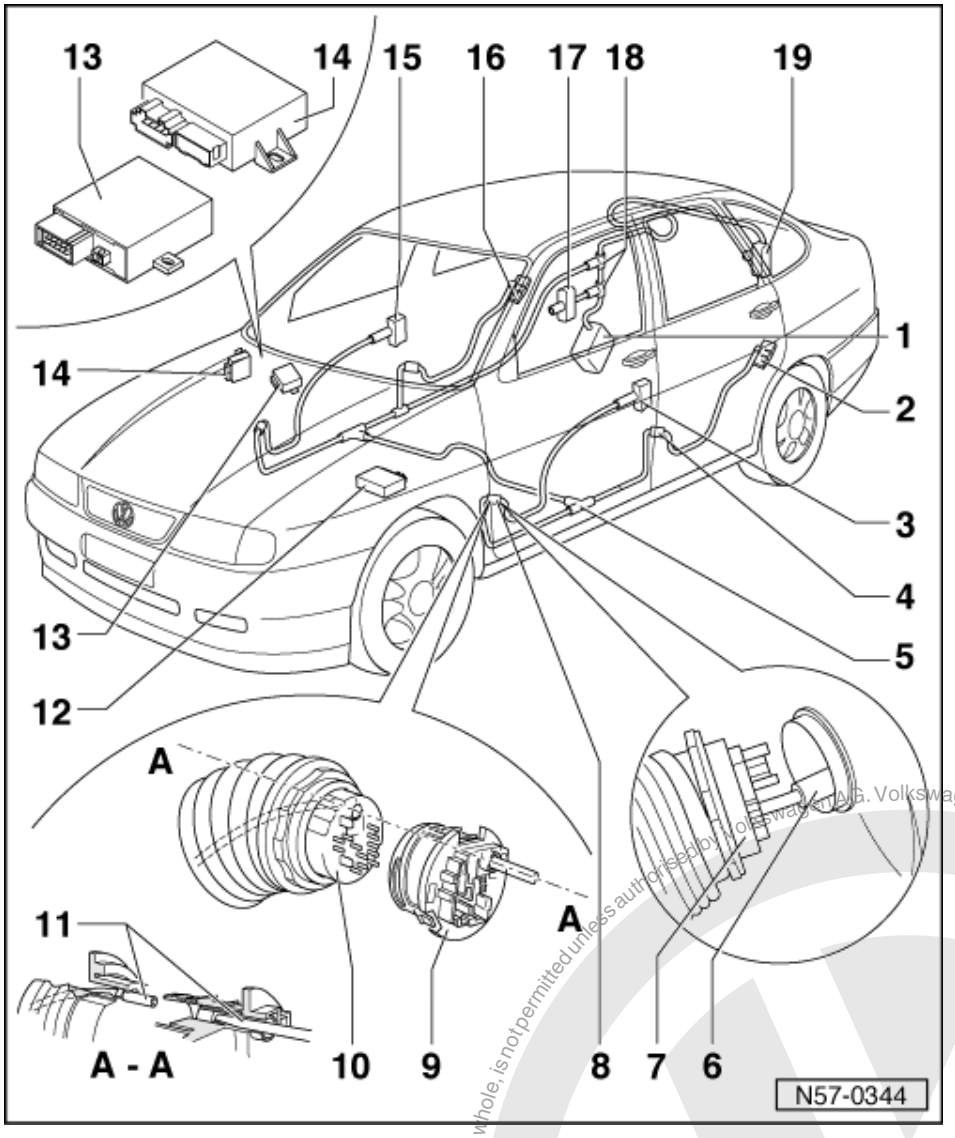

Note:

New coupling and junction piece for pipe connections => Page 46 .

1 Bi-pressure pump
- Removing and installing => Page 47

2 Rear door lock positioning element
- Removing and installing => Page 52

3 Front door lock positioning element
- Removing and installing => Page 50

4 Pipe connector
- Below bellows

Protected by copyright. Copying for private or commercial purposes, in part or in whole, is not permitted unless authorised by Volkswagen AG. Volkswagen AG does not guarantee or accept any liability with respect to the correctness of information in this document. Copyright by Volkswagen AG.
satelettronica

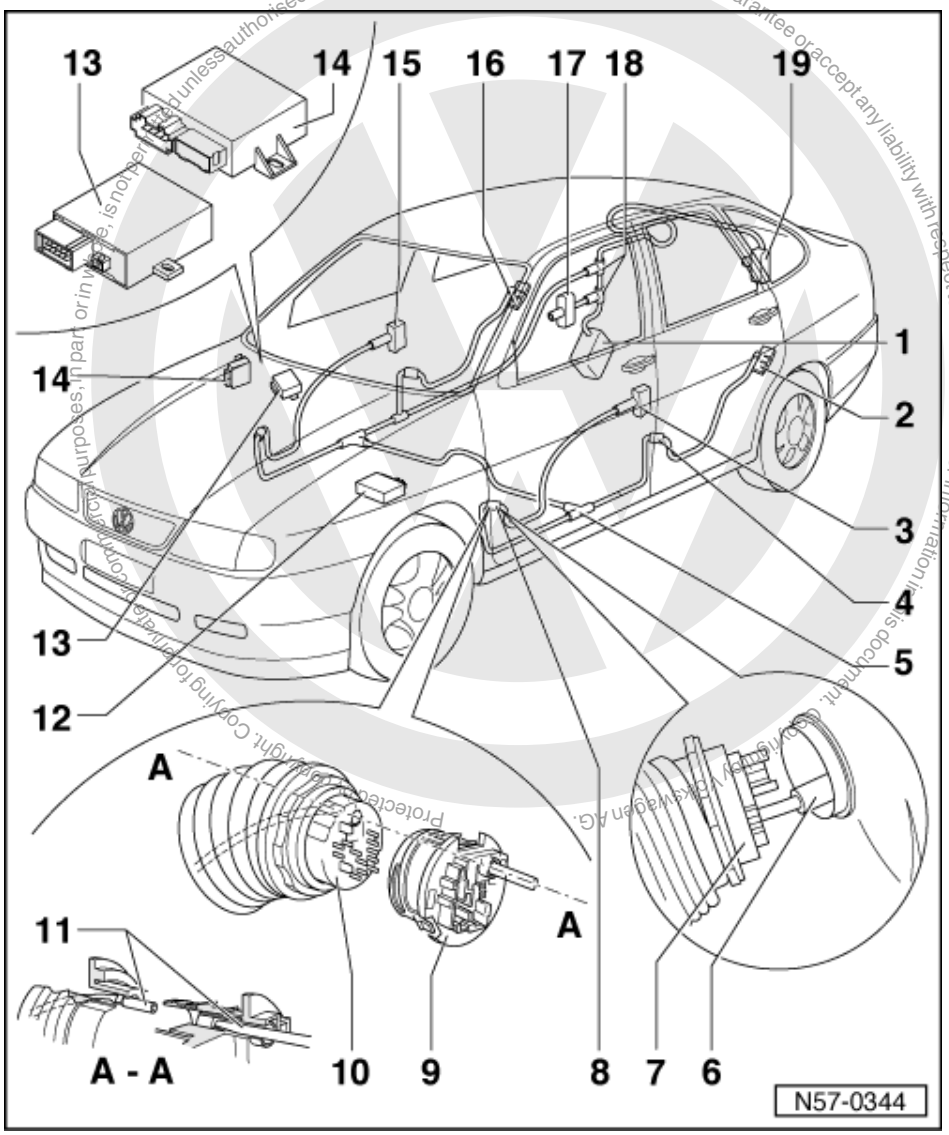

5 T-piece
- Fitting location: B pillar/sill, covered by sill trim

6 Pipe connector
- If the connector is located in the multi-pin connector, then the multi-pin connector must be separated to dismantle and assemble

7 Multi-pin connector

8 Multi-pin connector
- Discontinued version - 6 - and - 7 -
- New version - 9 -, - 10 - and - 11 -

9 A pillar connector part

10 Door connector part
- With bellows and union nut

11 Pipe connector
- Engages in connectors

satelettronica

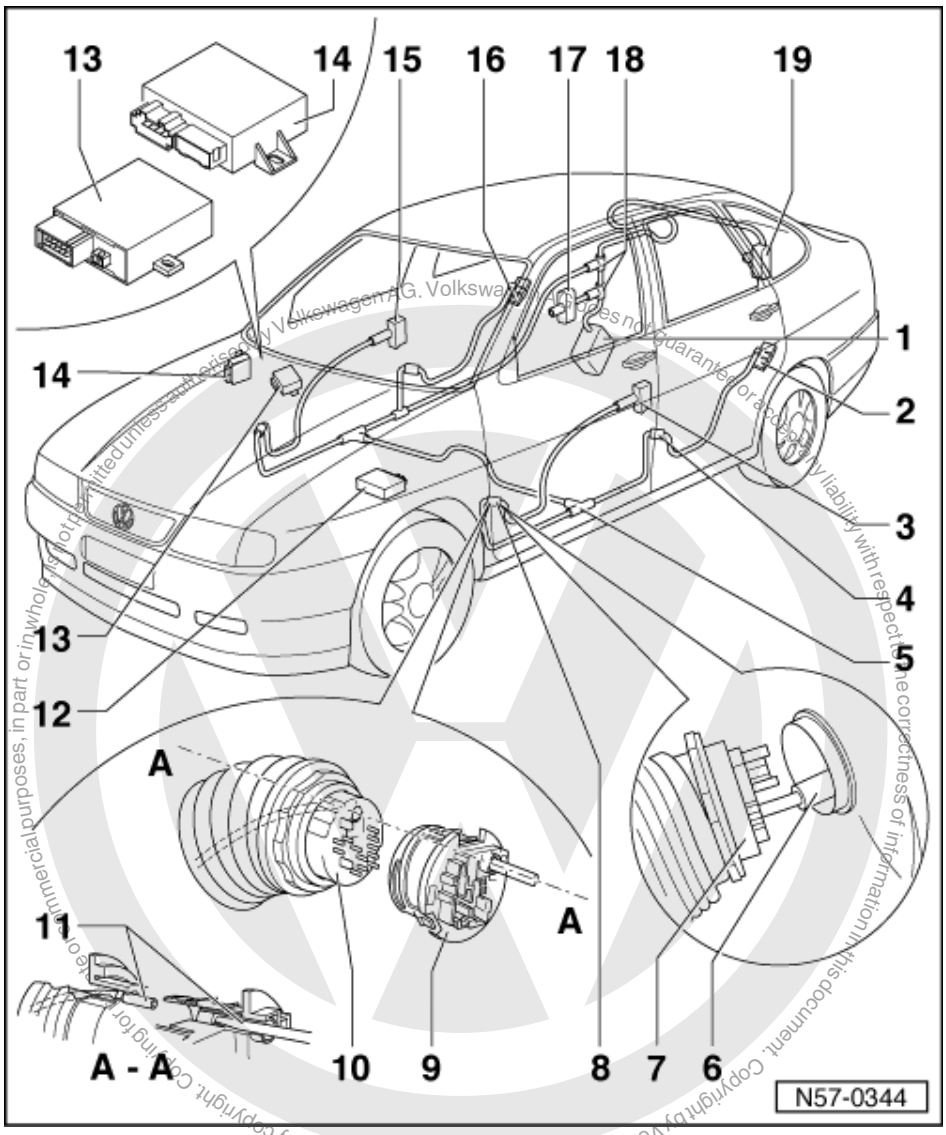

12 Convenience system control unit (J393)

- Vehicles 10.99 ▸
- Under relay carrier left of clutch pedal

13 Central locking remote release control unit (J276)

- Vehicles ▸ 09.99
- Optional equipment for central locking
- Behind front passenger's airbag or behind shelf below dash panel

14 Anti-theft alarm control unit (J284)

- Vehicles ▸ 09.99
- Optional equipment

15 Front door lock positioning element

- Removing and installing => Page 50

satelettronica

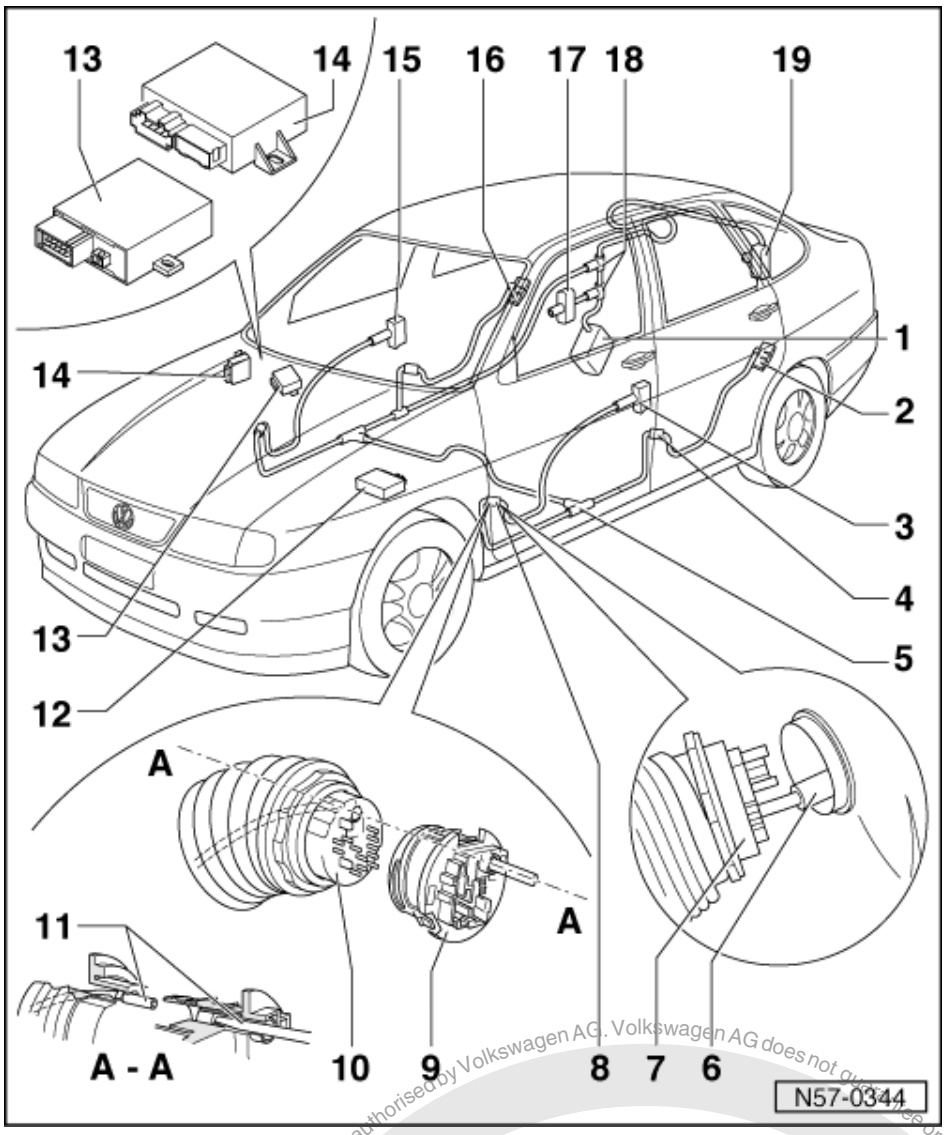

16 Rear door lock positioning element

- Removing and installing => Page 52

17 Fuel filler flap positioner

- To remove, the boot trim must be detached first of all up to wheel house
- Removing and installing => Page 48

18 T-piece

- To remove, the boot trim must be detached first of all up to wheel house

19 Boot lid/tailgate positioner

- Removing and installing =>Page 54

Protected by copyright. Copying for private or commercial purposes, in part or in whole, is not permitted unless authorised by Volkswagen AG. Volkswagen AG does not guarantee or accept any liability with respect to the correctness of information in this document. Copyright by Volkswagen AG.
satelettronica

2.4 - Central locking - Assembly overview (Polo Estate)

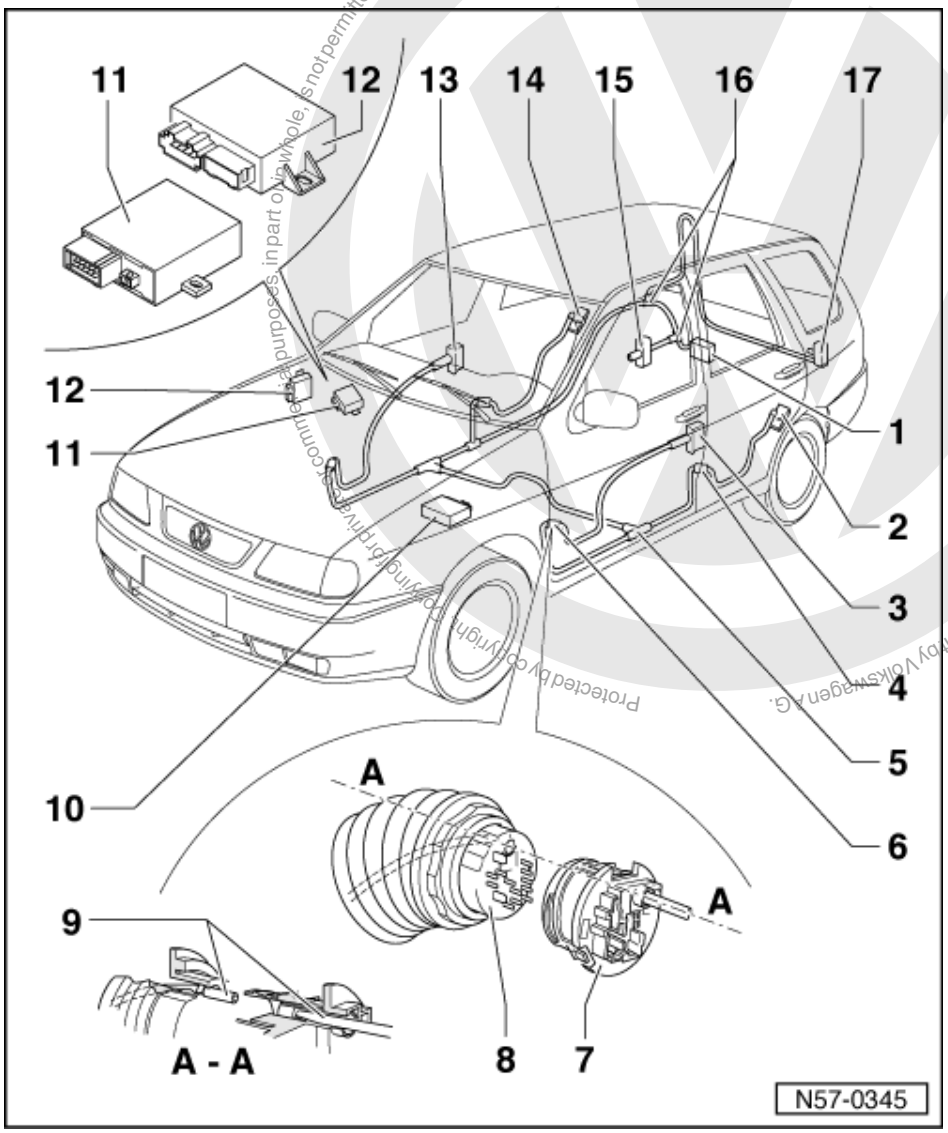

Note:

New coupling and junction piece for pipe connections => Page 46 .

1 Bi-pressure pump
- Removing and installing => Page 48

2 Rear door lock positioning element
- Removing and installing => Page 52

3 Front door lock positioning element
- Removing and installing => Page 50

4 Pipe connector
- Below bellows

Protected by copyright. Copying for private or commercial purposes, in part or in whole, is not permitted unless authorised by Volkswagen AG. Volkswagen AG does not guarantee or accept any liability with respect to the correctness of information in this document. Copyright by Volkswagen AG.
satelettronica

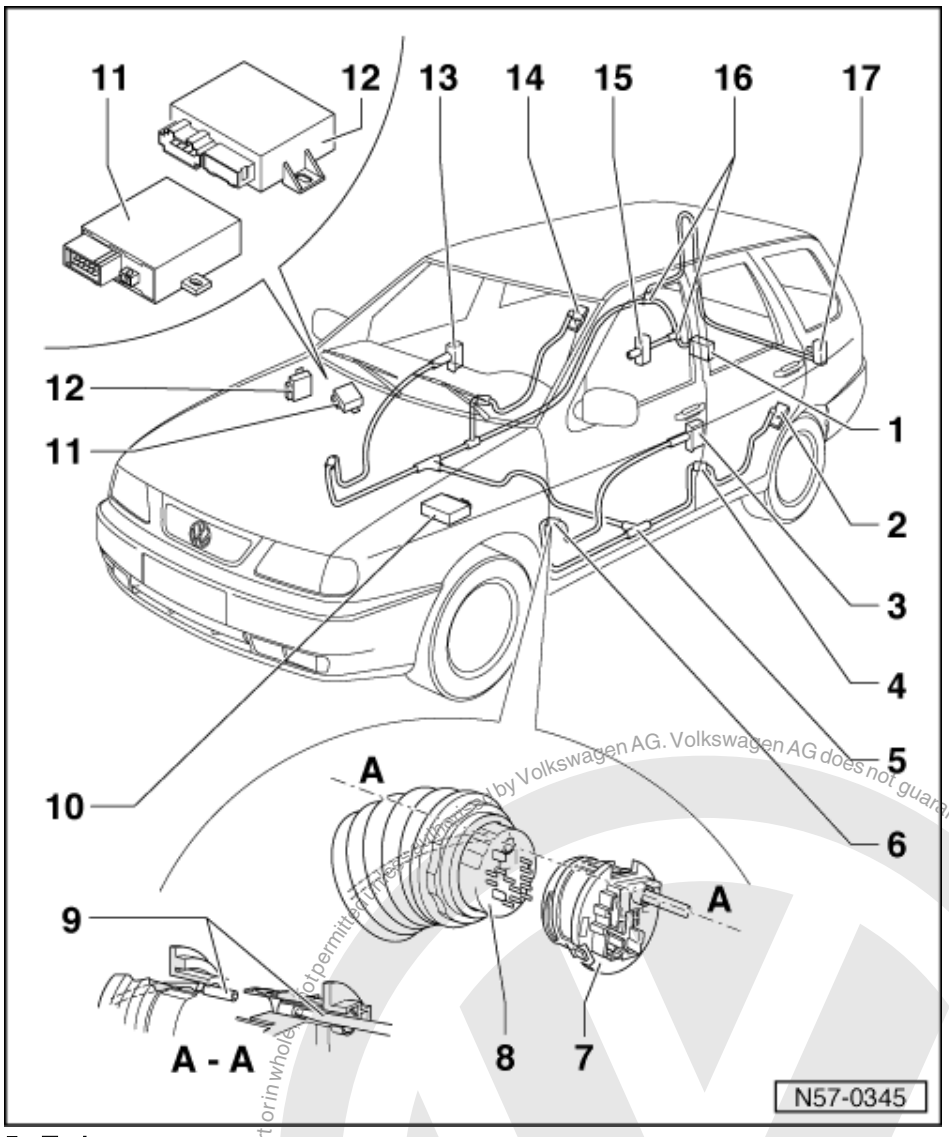

5 T-piece
- Fitting location: B pillar/sill, covered by sill trim

6 Multi-pin connector

7 A pillar connector part

8 Door connector part
- With bellows and union nut

9 Pipe connector
- Engages in connectors

10 Convenience system control unit (J393)
- Vehicles 10.99 ▸
- Under relay carrier left of clutch pedal

Protected by copyright. Copying for private or commercial purposes, in part or in whole, is not permitted unless authorised by Volkswagen AG. Volkswagen AG does not guarantee or accept any liability with respect to the correctness of information in this document. Copyright by Volkswagen AG.
satelettronica

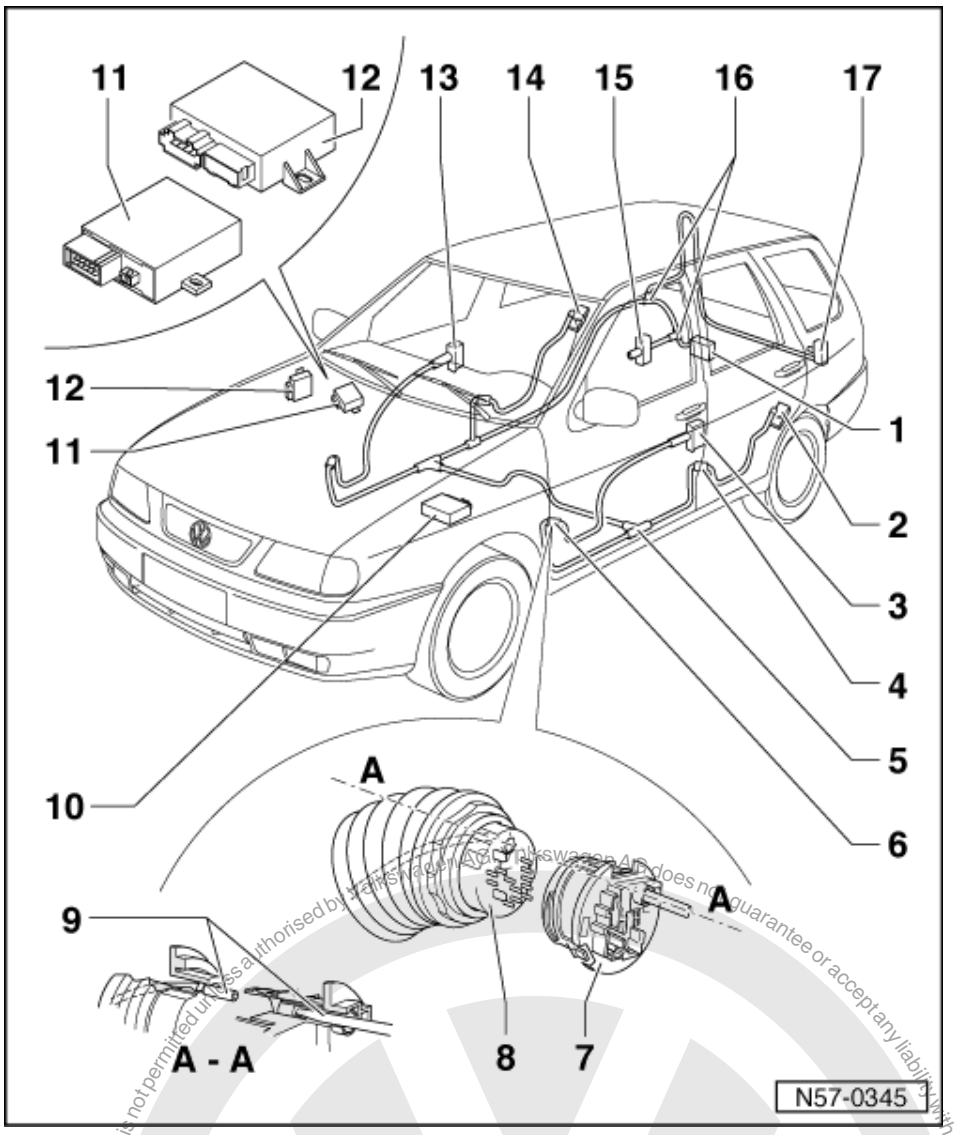

11 Central locking remote release control unit (J276)

- Vehicle ‣ 09.99
- Optional equipment for central locking
- Behind front passenger's airbag or behind shelf below dash panel

12 Anti-theft alarm control unit (J284)

- Vehicle ‣ 09.99
- Optional equipment

13 Front door lock positioning element

- Removing and installing => Page 50

14 Rear door lock positioning element

- Removing and installing => Page 52

satelettronica

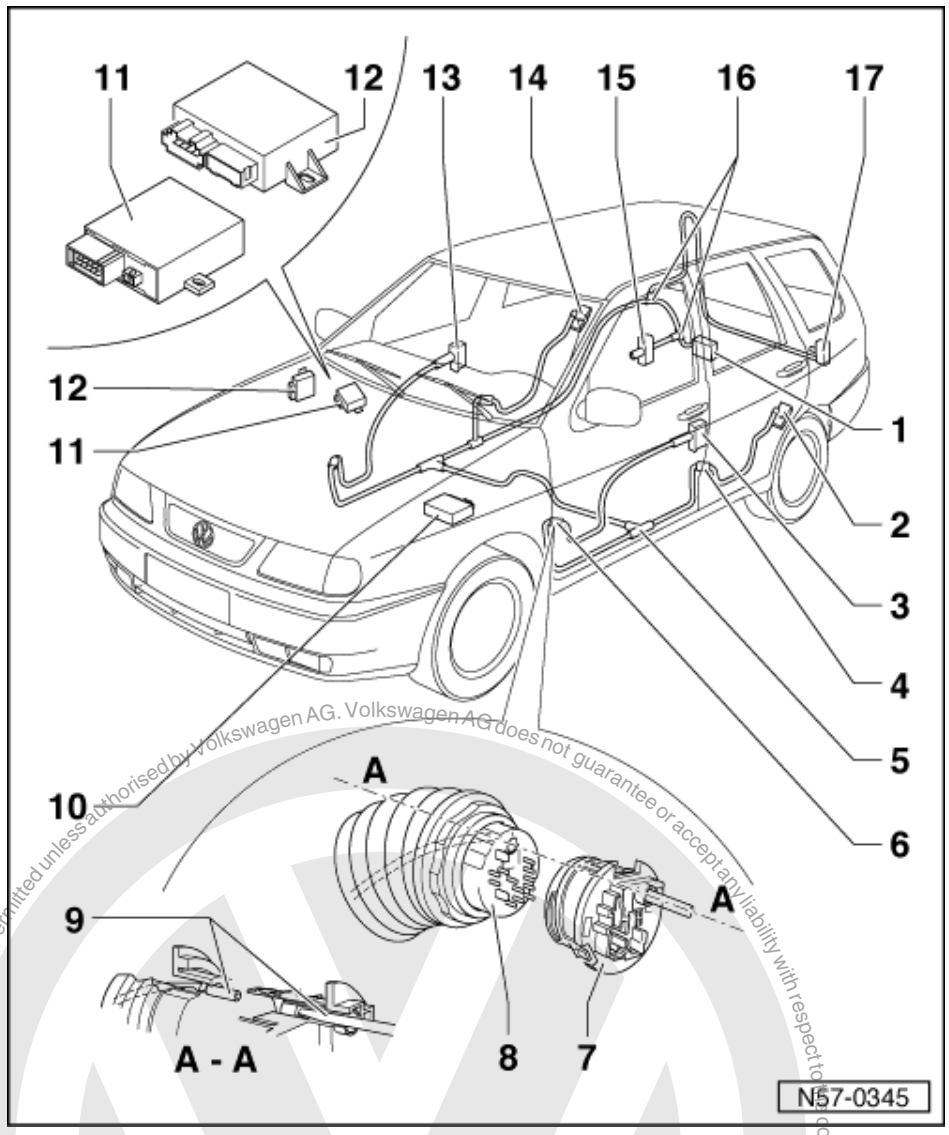

15 Fuel filler flap positioner

- To remove, the boot trim must be detached up to wheel housing first of all
- Removing and installing => Page 49

16 T-piece

- To remove, the boot trim must be detached up to wheel housing first of all

17 Boot lid/tailgate positioner

- Removing and installing =>Page 54

Protected by copyright. Copying for private or commercial purposes, in part or in whole, is not permitted unless authorised by Volkswagen AG. Volkswagen AG does not guarantee or accept any liability with respect to the correctness of information in this document. Copyright by Volkswagen AG.
satelettronica

2.5 - New coupling and junction piece for pipe connector

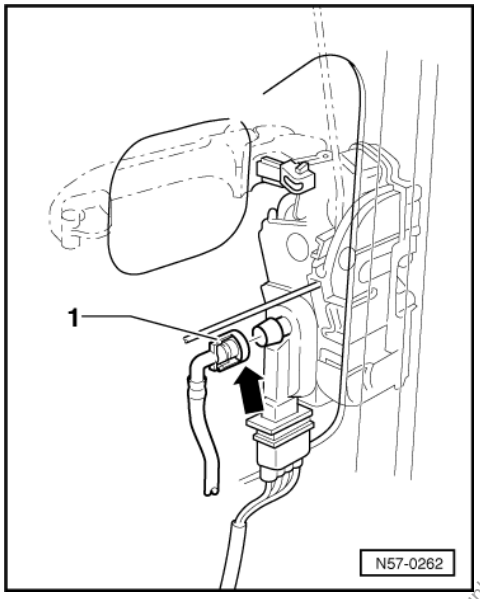

New couplings and junctions have gradually been introduced for actuators and the bi-pressure pump.

- -> Release coupling -1- by pressing forward ring -arrow- together. Check coupling is correctly engaged when fitting.

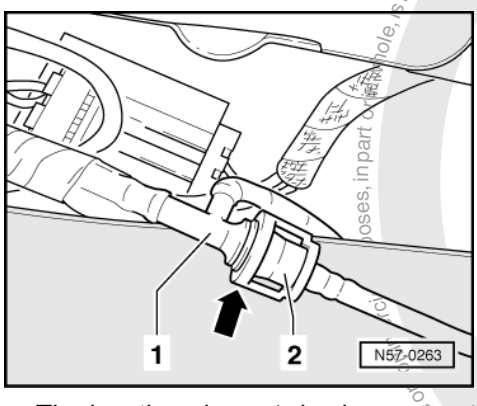

-> The junction piece -1- is also connected via these couplings.

- Release coupling -2- by pressing forward ring -arrow- together. Check coupling is correctly engaged when fitting.

2.6 - Removing and installing bi-pressure pump (Caddy)

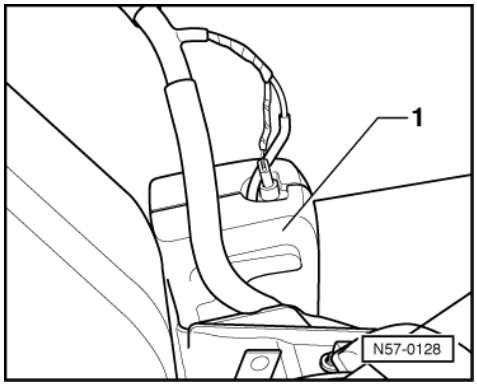

Protected by copyright. Copying for private or commercial purposes, in part or in whole, is not permitted unless authorised by Volkswagen AG. Volkswagen AG does not guarantee or accept any liability with respect to the correctness of information in this document. Copyright by Volkswagen AG.
satelettronica

- Remove left side trim before wheel housing.
- -> Take bi-pressure pump with insulation -1- out upwards.

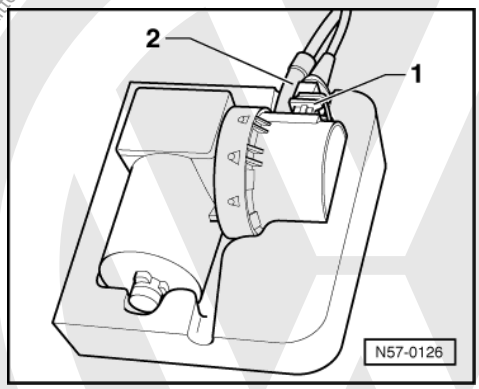

- -> Pull multi-pin connector -1- and pressure pipe -2- off bi-pressure pump. When reconnecting the multi-pin connector, check that it is properly locked in position.

Note:

Pipes must be pushed approx. 1.5 cm into the pipe connections.

2.7 - Removing and installing bi-pressure pump (Polo Classic)

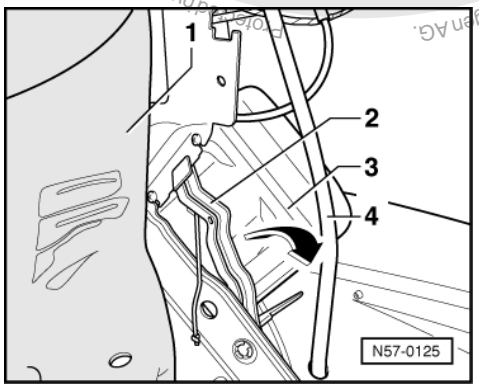

- -> Release luggage compartment trim -1- on right-hand side and open out.

=> General body repairs, interior; Repair group 70; Luggage compartment trim Luggage compartment trim

- Swing retainer -2- to rear -arrow-.
- Pull water drain hose -4- for sun roof out from hole in body.
- Take bi-pressure pump with insulation -3- out upwards.

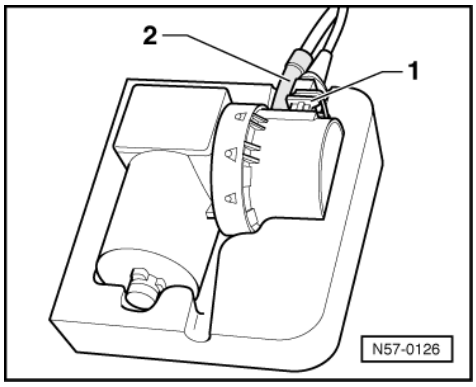

- -> Pull multi-pin connector -1- and pressure pipe -2- off bi-pressure pump. When reconnecting the multi-pin connector, check that it is properly locked in position.

satelettronica

Note:

Pipes must be pushed approx. 1.5 cm into the pipe connections.

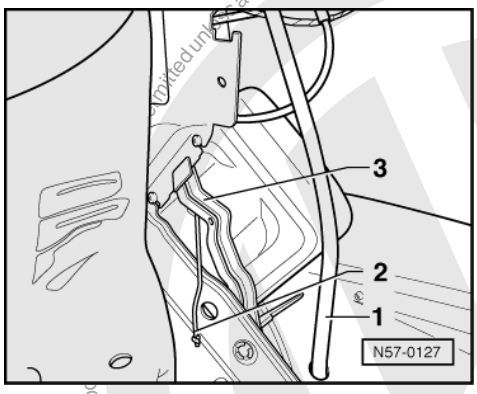

- -> Hook cord -2- into retainer -3- again so that it can be reached through opening in luggage compartment trim after installing bi-pressure pump.
- Insert water drain hose -1- for sun roof through hole in body, after installing bi-pressure pump.

2.8 - Removing and installing bi-pressure pump (Polo Estate)

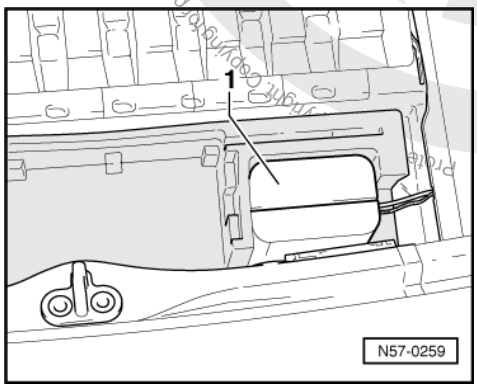

- Open rear flap in luggage compartment floor.
- -> Take bi-pressure pump with insulation -1- out upwards.

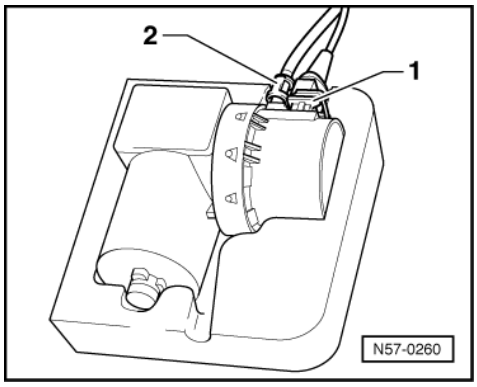

- -> Pull multi-pin connector -1- and pressure pipe -2- off bi-pressure pump. Check that pressure pipe properly locked in position when reconnecting the multi-pin connector.

2.9 - Removing and installing tank flap positioning element (Polo Classic)

- Release luggage compartment trim on right-hand side and open out.

Copied unauthorized by Volkswagen AG. Volkswagen AG does not guarantee or accept any liability with respect to the correctness of information in this document. Copyright by Volkswagen AG.
satelettronica

=> General body repairs, interior; Repair group 70; Luggage compartment trim Luggage compartment trim

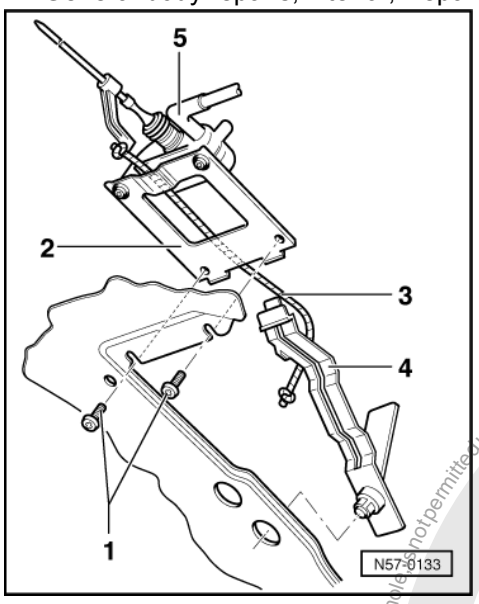

- Remove bi-pressure pump => Page 47 .
- -> Remove screws -1-.
- Pull bracket -2- with positioning element and fitted locking rod out of fuel filler cup.
- Unhook cord -3- on bi-pressure pump retainer -4-.
- Pull pressure line -5- off positioning element.

Install in reverse order.

- Hook cord -2- into retainer -3- again so that it can be reached through opening in luggage compartment trim after installing bi-pressure pump.

Note:
Pipes must be pushed approx. 1.5 cm into the pipe connections.

2.10 - Removing and installing tank flap positioning element (Polo Estate)

- Remove luggage compartment cover

=> General body repairs, interior; Repair group 68; Luggage compartment cover Luggage compartment cover

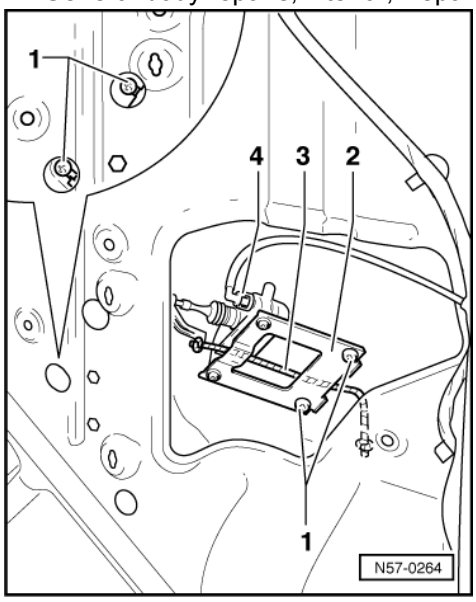

Copyright by Volkswagen AG. Volkswagen AG does not guarantee or accept any liability with respect to the correctness of information in this document. Copyright by Volkswagen AG. Not to be used for commercial purposes, nor in whole or in part, without the express permission of Volkswagen AG.
satelettronica

- Release luggage compartment trim on right-hand side and open out.

=> General body repairs, interior; Repair group 70; Luggage compartment trim Luggage compartment trim

- -> Remove screws -1-.
- Pull bracket -2- with positioning element and fitted locking rod out of fuel filler cup.
- Pull pressure line coupling -4- off positioning element.

Install in reverse order.

- Hook cord -3- into retainer again so that it can be reached through opening in luggage compartment trim after installing bi-pressure pump.

2.11 - Removing and installing front door positioning element

Removing

- Remove door handle => Page 30 .
- Remove door trim and door insulation sheeting.

=> General body repairs, interior; Repair group 70; Door trim Door trim

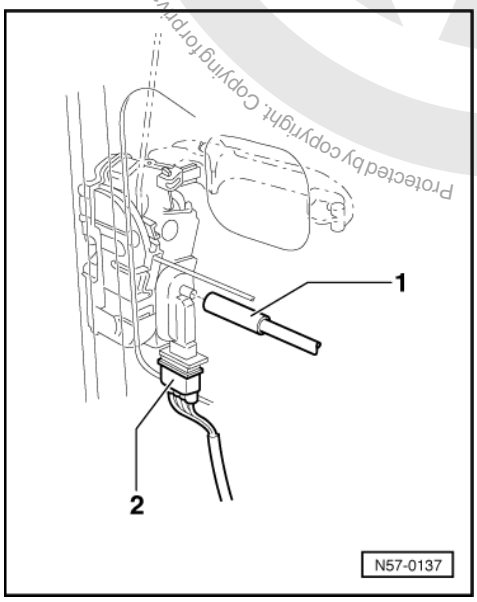

- Remove door window => Page 148 .
- -> Pull pressure pipe -1- and multi-pin connector -2- off positioning element.

Note:

Pipes must be pushed approx. 1.5 cm into the pipe connections.

Protected by copyright. Copying for private or commercial purposes, in part or in whole, is not permitted unless authorised by Volkswagen AG. Volkswagen does not guarantee or accept any liability with respect to the correctness of information in this document. Copyright by Volkswagen AG.
satelettronica

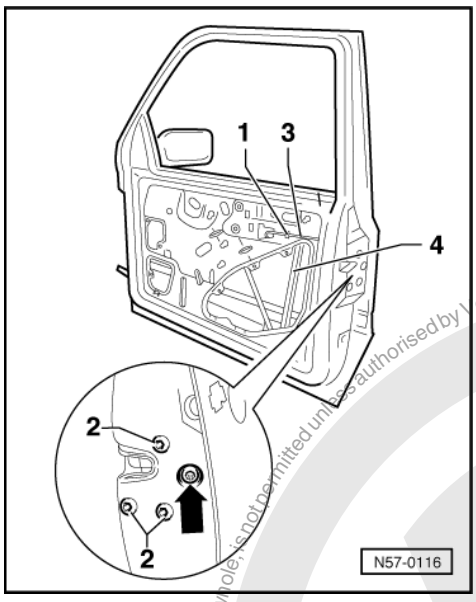

- -> Remove bolts -2-
  Tightening torque: 8 Nm.
- Loosen window lifter rearmost strut -4- securing bolts and slide window lifter strut forwards.
- Unclip rod clip -1-, take door lock with pull rod -3- out through installation opening.

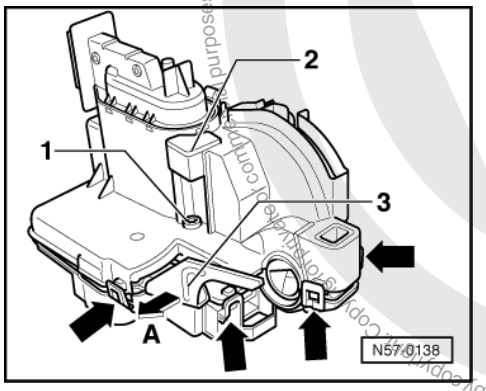

- -> Turn door lock rotary latch to "locked position".
- Pull off stop buffer -2-.
- Remove bolt -1-.
- Release positioning element -arrows- and remove from door lock.
- When doing this pull operating lever -3- away slightly from door lock -arrow A-.

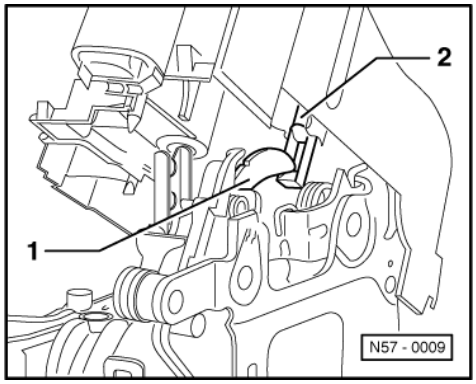

- -> The locking lever -1- slides out of the plunger -2- when removing the positioning element.

Production purposes, in whole or in part, is not permitted unless authorised by Volkswagen AG. Volkswagen AG does not guarantee or accept any liability with respect to the correctness of information in this document. Copyright by Volkswagen AG.
satelettronica

Installing

Install in reverse order.

When installing the locking lever -1- must locate in the plunger -2- again.

Note:

If after replacing the positioning element the door lock does not function properly, renew the door lock complete with positioning element.

2.12 - Removing and installing rear door lock positioning element (Caddy)

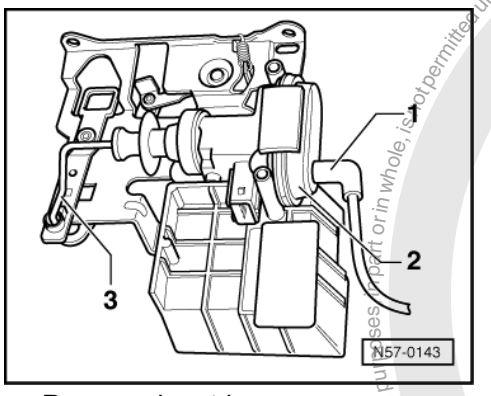

- Remove door trim

=> General body repairs, interior; Repair group 70; Door trim Door trim

- Remove left wing door lock operating mechanism =>Page 64 .
- -> Pull off pressure pipe -1-, unbolt door lock operating mechanism positioning element -2- and unhook operating rod -3-.

2.13 - Removing and installing boot lid/tailgate lock positioning element (Polo Classic, Polo Estate)

Removing

Door window must be closed.

- Remove door handle.
- Remove door trim and door insulation sheeting.

=> General body repairs, interior; Repair group 70; Door trim Door trim

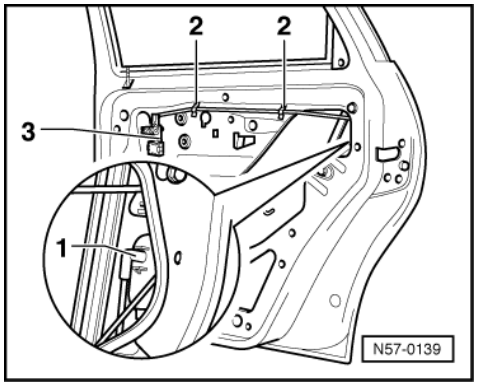

Protected by copyright. Copying for private or commercial purposes, in part or in whole, is not permitted unless authorised by Volkswagen AG. Volkswagen AG does not guarantee or accept any liability with respect to the correctness of information in this document. Copyright by Volkswagen AG.
satelettronica

- -> Pull pressure pipe -1- off positioning element. Unhook locking rods securing clips -2-.

Note:

Pipes must be pushed approx. 1.5 cm into the pipe connections.

- Press relay lever -3- spreader pin out, take relay lever off door and unhook locking rod.
- Always remove spreader pin from the door (rattling noises).

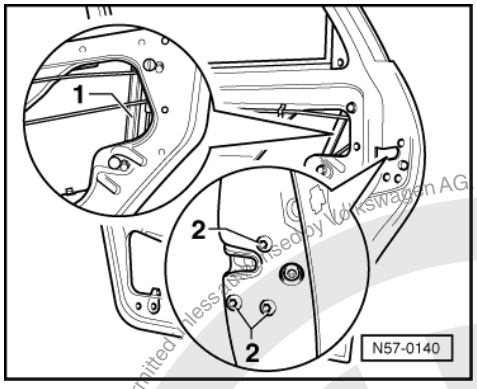

- -> Remove window guide retainer -1- bolts and unhook window guide from door.
- Remove bolts -2-
  Tightening torque: 8 Nm.
- Lift door lock out through installation opening and unhook locking rod on door lock.

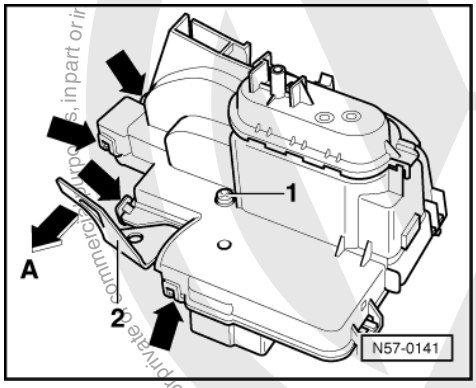

- -> Turn door lock rotary latch to "locked position".
- Remove bolt -1-.
- Release positioning element -arrows- and remove from door lock.
- When doing this pull operating lever -2- away slightly from door lock -arrow A-.

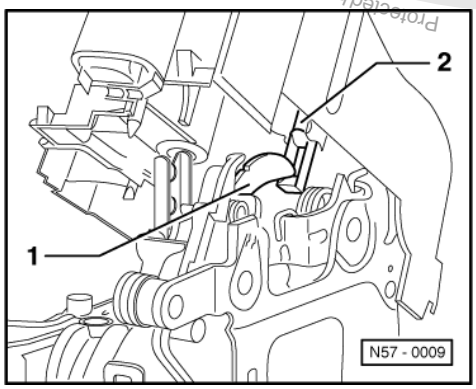

- -> The locking lever -1- slides out of the plunger -2- when removing the positioning element.

satelettronica

Installing

Install in reverse order.

When installing the locking lever -1- must locate in the plunger -2- again.

Note:

If after replacing the positioning element the door lock does not function properly, renew the door lock complete with positioning element.

Protected by copyright. Copying for private or commercial purposes, in part or in whole, is not permitted unless authorised by Volkswagen AG. Volkswagen AG does not guarantee or accept any liability with respect to the correctness of information in this document. Copyright by Volkswagen AG.

2.14 - Removing and installing boot lid positioning element (Polo Classic)

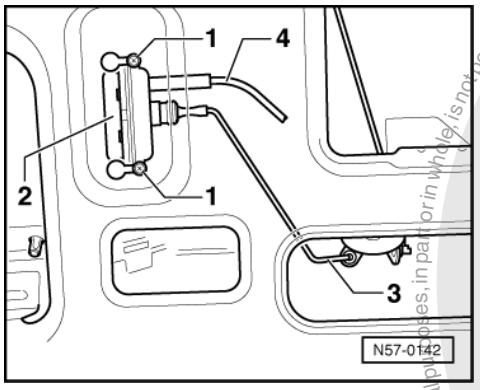

- Remove tailgate/boot lid trim

=> General body repairs, interior; Repair group 70; Tailgate/boot lid trim Tailgate/boot lid trim

- -> Pull locking rod -3- out of the push button (in detent) and pull off pressure pipe -4-.
- Loosen cross-head screws -1- and pull positioning element -2- with locking rod out of tailgate/boot lid.

2.15 - Removing and installing tailgate positioning element (Polo Estate)

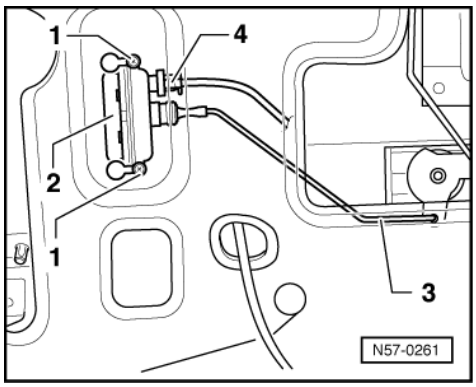

- Remove tailgate/boot lid trim

=> General body repairs, interior; Repair group 70; Tailgate/boot lid trim Tailgate/boot lid trim

- -> Pull locking rod -3- out of the push button (in detent).
- Loosen cross-head screws -1- and pull positioning element -2- with locking rod out of tailgate/boot lid.
- Pull off pressure pipe coupling -4-.

satelettronica

2.16 - Activating individual door opening of central locking system

- By opening the circuit between earth (terminal 31) and connector pin No. 8 of the bi-pressure pump, individual door opening can be activated

Notes:
- Individual door opening is only possible mechanically using the key. When using the radio remote control, all doors are opened.
- By reconnecting the wire, all-door opening can be reactivated.

2.17 - Functional check of central locking

Note:
If system is operating properly, all locks must lock after about 2 seconds. If bi-pressure pump runs for longer than 5 seconds, the system is leaking.
During the first opening operation only that particular door is unlocked. If a 2nd unlocking operation is undertaken within 5 seconds then the complete central locking is unlocked.

Requirements for operational check:
- Doors, tailgate/boot lid and tank flap closed.
- Door windows fully open.

Checking locking
- Press down locking knob on driver's door.

- All the locking knobs must move downwards. All doors and tailgate/boot lid are locked and the fuel tank flap (Polo Classic and Polo Estate only) is secured.

- Check that all doors, tailgate/boot lid and fuel tank flap (Polo Classic and Polo Estate only) are locked.

Note:
Central locking and unlocking is possible by operating the locking knob of the driver's/front passenger's door.

2.18 - Functional check of central locking with radio remote control

Vehicles 06.96 ‣ with a radio remote control system, the door locks can be locked or unlocked without directly operating the door locks. The anti-theft alarm system can also be activated or deactivated using the radio remote control if the system is fitted. All additional functions as opposed to a central locking system without radio remote control are described in the following.

The radio sender with batteries is located in the vehicle key grip. The radio receiver is located under the dash panel in the interior of the vehicle.

The effective range of the radio remote control is 6 ...15 m. The range is dependent upon various factors (atmospheric conditions, metallic materials in the vicinity of the vehicle,condition of the battery in the key).

If the batteries are considerably discharged, only the unlocking functions will be carried out. The vehicle can no longer be locked using the radio remote control and the respective key can no longer be synchronized.

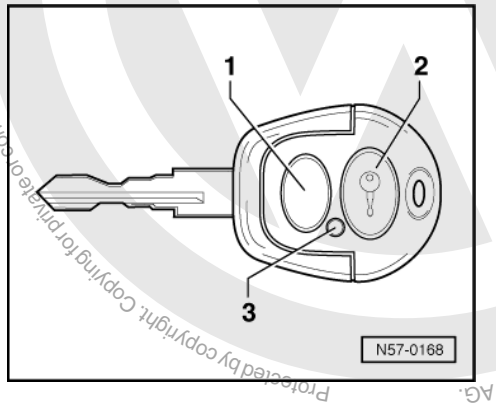

Protected by copyright. Copyright by Volkswagen AG. Volkswagen AG does not guarantee or accept any liability with respect to the correctness of information in this document. Copyright by Volkswagen AG. Copying for private or commercial purposes, in part or in whole, is not permitted unless authorised by Volkswagen AG.
satelettronica

- -> To unlock vehicle, point the key from within the effective range at the vehicle and briefly press the "open" button -1-. The unlocking of the vehicle and the deactivation of the anti-theft alarm system, if applicable, is identical by the hazard warning light system lighting up for approx. 0.5 seconds. To lock the vehicle, briefly press the "close" button -2-.

If the "lock" button -2- is depressed for at least one second the anti-theft alarm system is simultaneously activated.

The locking of the vehicle and the activation of the anti-theft alarm system is indicated by the hazard warning system switching on for approx. 2 seconds.

When the close or open buttons are pressed the warning lamp -3- will flash in the key. If this lamp does not flash, the battery in the key might be discharged. Renew battery if necessary.

It is not necessary to resynchronise the key after changing a battery.

The system code is changed after each unlocking or locking operation with the radio remote control.

If the sender buttons are operated for more than 50 times outside of the effective range the system reacts after first pressing the respective button -1- or -2- twice quickly.

2.19 - Synchronising keys with radio remote control > 09.99

Synchronising a key with radio remote control is required when:

- Additional new keys (a maximum of 4 keys) have been obtained for the vehicle or defective keys are replaced.
- Radio remote control central locking control unit (J276) has been replaced

or

- the complete lock system has been replaced.

Always match the new keys to the immobilizer first.

=> Electrical system; Repair group 01; Self-diagnosis of immobilizer Self-diagnosis of immobilizer

Successfully synchronising a key erases the previous synchronization (code) of the other keys.

Therefore the complete key set (a maximum of 4 keys) must be resynchronized immediately one after the other.

Note:

When synchronising a key there must be no other vehicle with radio remote control within the effective range of the key.

- With the first key to be synchronised, switch on the ignition for a maximum of 5 seconds.
- Switch off ignition and remove key.

The synchronization of the key must take place within the next 20 seconds.

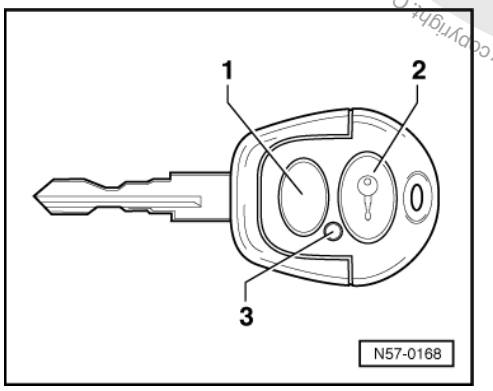

Protected by copyright. Copy, distribution or commercial purposes in part or in whole, is not permitted unless authorised by Volkswagen AG. Volkswagen AG does not guarantee or accept any liability with respect to the correctness of information in this document. Copyright by Volkswagen AG.
satelettronica

- -> Press and hold lock button -2- and whilst doing this press unlock button -1- three times.
- Release lock button -2-. The warning light -3- in key flashes five times.

If the radio receiver accepts the key synchronization the vehicle will be locked and unlocked once and the hazard warning system will be activated respectively by the system.

After completing the synchronization of a key the other (maximum of a further three) keys must be synchronised by pressing and holding the lock button -2- and depressing the unlock button -1- three times along with the relevant reaction from the system, within the next 20 seconds for each.

The synchronization sequence is terminated when the time limit of 20 seconds is exceeded or the ignition switched on for at least 5 seconds. The synchronization sequence is automatically terminated when 4 keys have been synchronised.

2.20 - Removing and installing batteries for the main key with radio wave remote control

=> Body self-diagnosis; Repair group 01; Convenience system 10.99 ‣self-diagnosis; Removing and installing batteries from main key with radio remote control. Convenience system 10.99 ‣self-diagnosis Removing and installing batteries from main key with radio remote control.

Protected by copyright. Copying for private or commercial purposes, in part or in whole, is not permitted unless authorised by Volkswagen AG. Volkswagen AG does not guarantee or accept any liability with respect to the correctness of information in this document. Copyright by Volkswagen AG.
satelettronica

58 - Rear doors/Door components

1 - Rear door (Caddy)

1.1 - Rear door (Caddy)

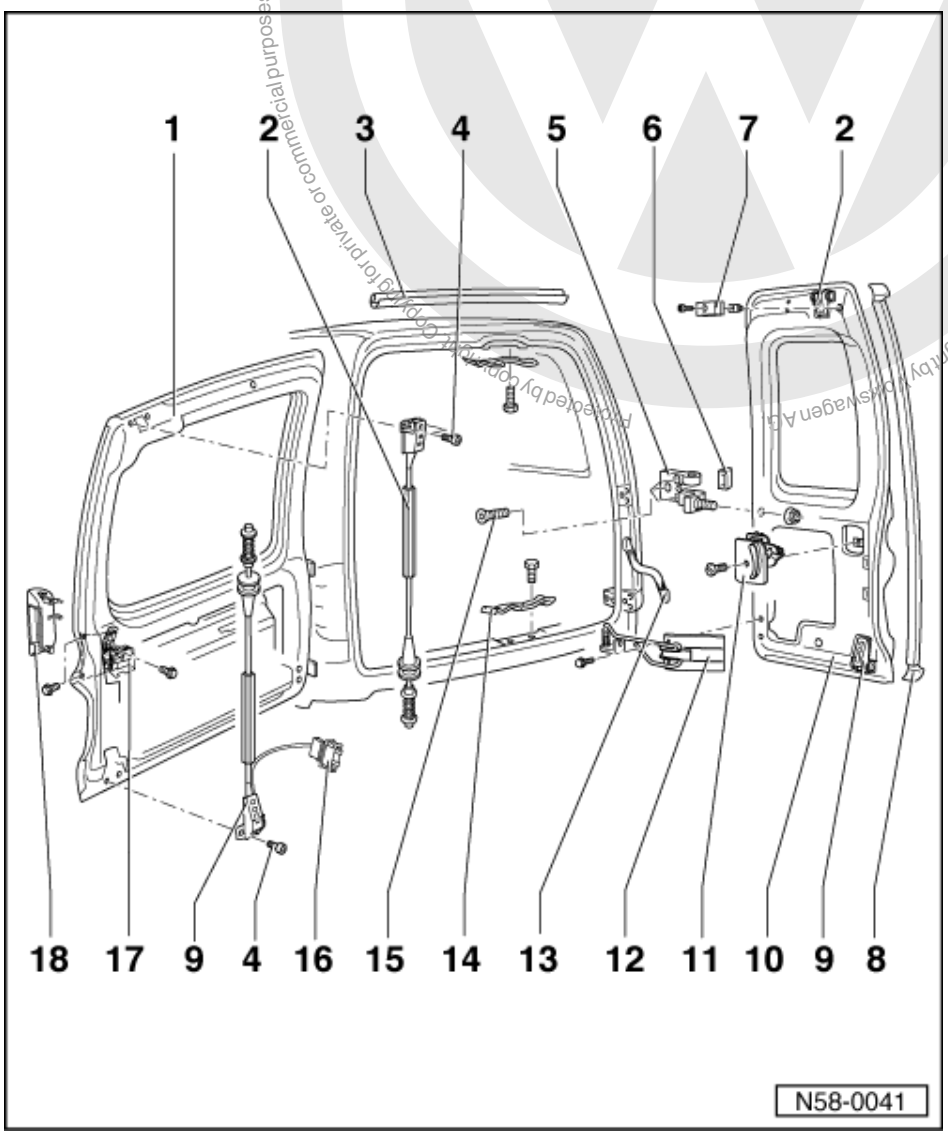

1.2 - Servicing rear wing doors

1 Rear left wing door
2 Upper door lock
- Cable can be unhooked on door lock
- Removing:
- Remove door trim

=> General body repairs; Repair Group 70; Door trim Door trim

satelettronica

- Unhook cable on door lock operating mechanism - 66 (for right wing door).
- Remove bolts - 4 - and pull door lock with cable out of door.
◆ Installing:
- After installing in reverse order, adjust lock.

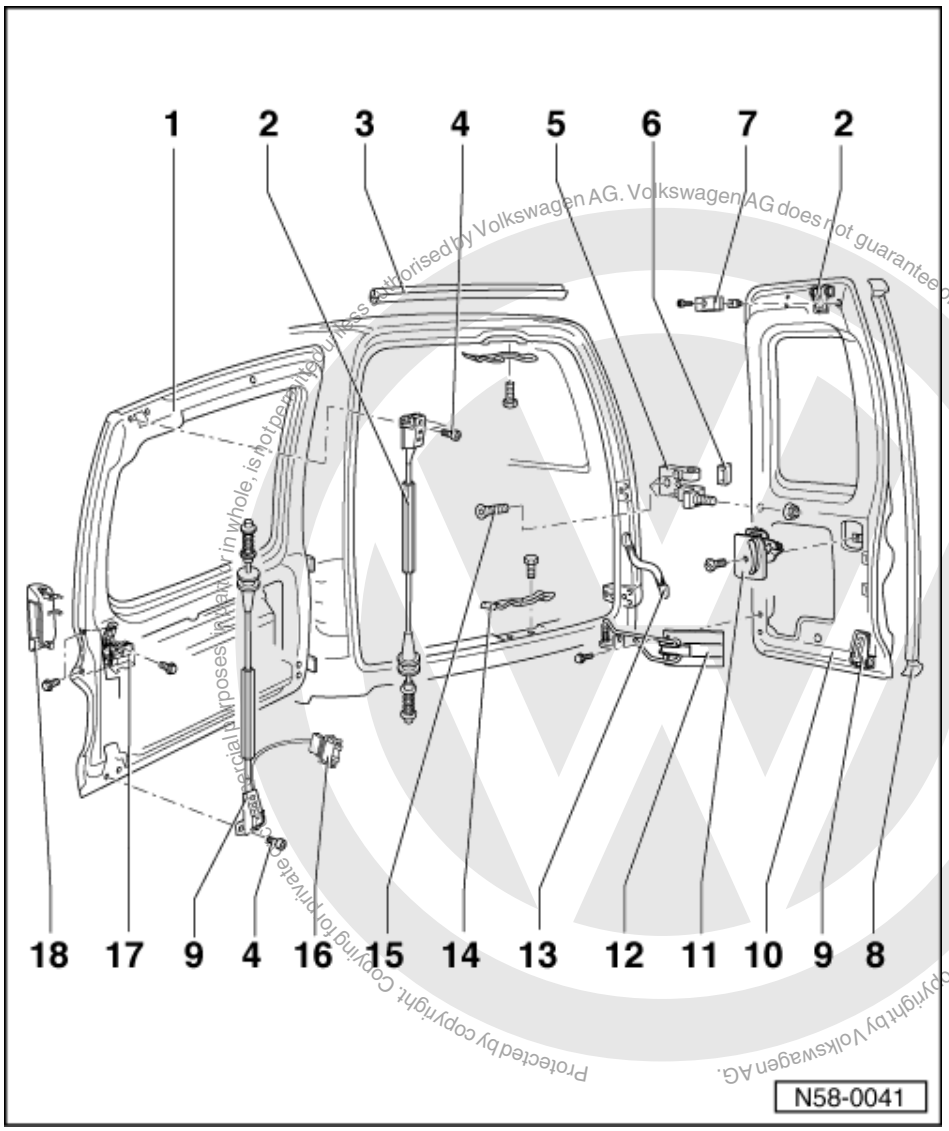

◆ Adjusting => Page 63
- Perform cable adjustments (synchronization) => Page 66 (for right wing door).

3 Seal
◆ Stuck in position with double sided tape D 438 525 A2
4 Bolt
5 Door hinge
6 Rubber stop
◆ Clipped onto door hinge
7 Rubber stop
◆ Screwed on
8 Seal

satelettronica

Protected by copyright. Copyright by Volkswagen AG. Volkswagen AG does not guarantee or accept any liability with respect to the correctness of information in this document. Copyright by Volkswagen AG.

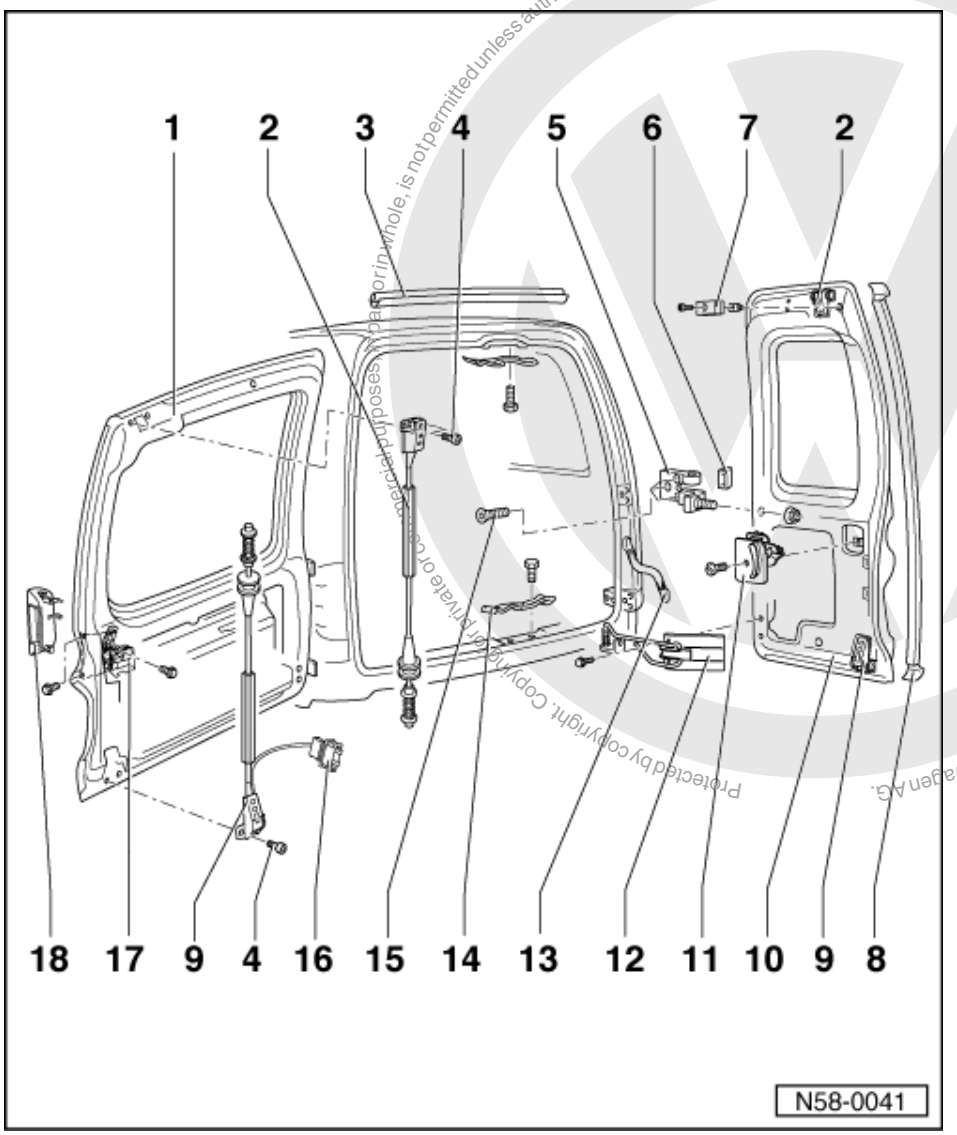

9 Lower door lock

- ◆ Cable can be unhooked on door lock
- ◆ Removing:
- - Remove door trim

=> General body repairs, interior; Repair Group 70; Door trim Door trim

- - Unhook cable on door lock operating mechanism - 66 (for right door wing).
- - Separate interior light switch connector - 16 - (left door only).
- - Remove bolts - 4 - and pull door lock with cable out of door.
- ◆ Installing:
- - After installing in reverse order, adjust lock.

satelettronica

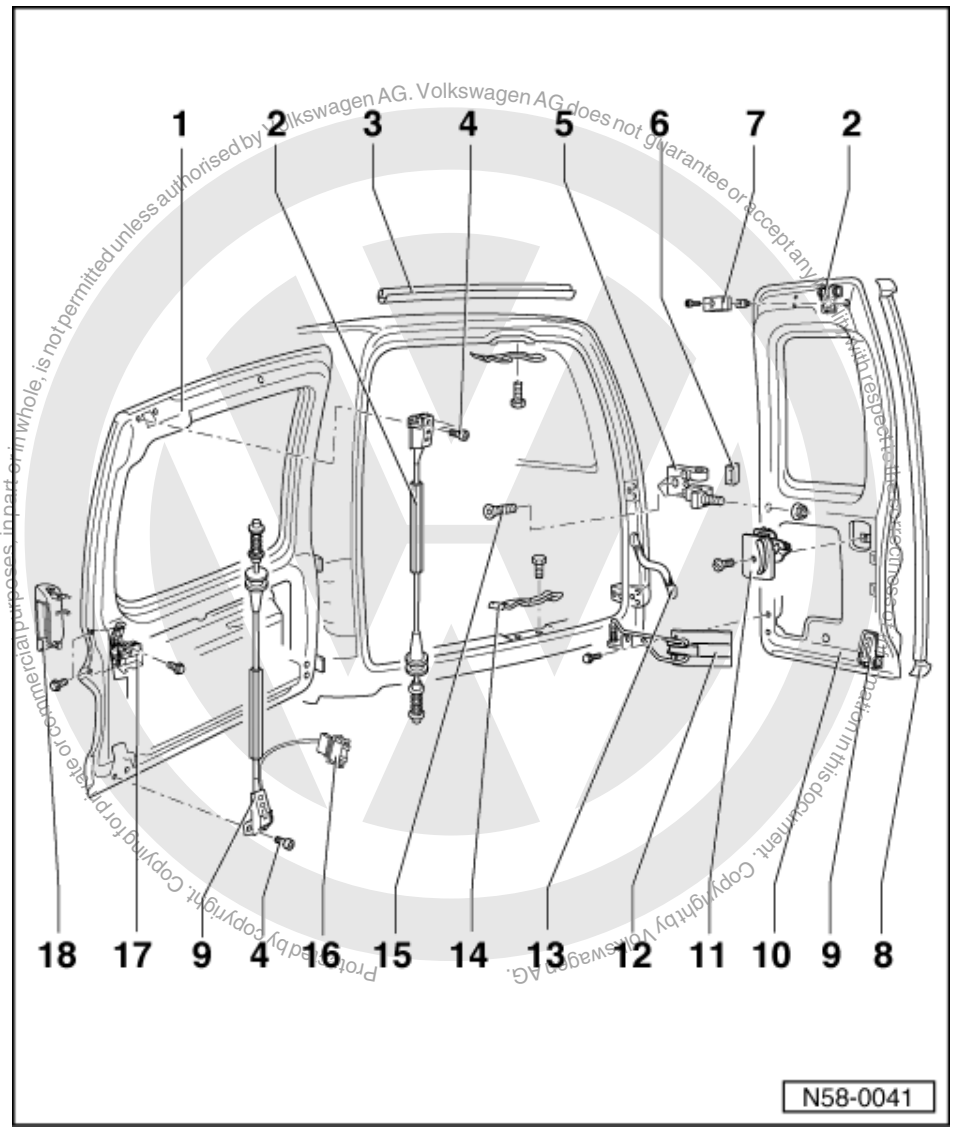

- Adjusting => Page 63
- Perform cable adjustments (synchronization) => Page 66 (for right door wing).

10 Rear right wing door

11 Interior release handle

- Removing => Page 66
- Adjusting => Page 66

12 Door arrester

13 Rubber grommet

- For electrical wiring, central locking pressure pipe and window washer system pipe.

14 Striker pin

- Upper and lower items are identical
- Adjust by moving striker pin within elongated holes

satelettronica

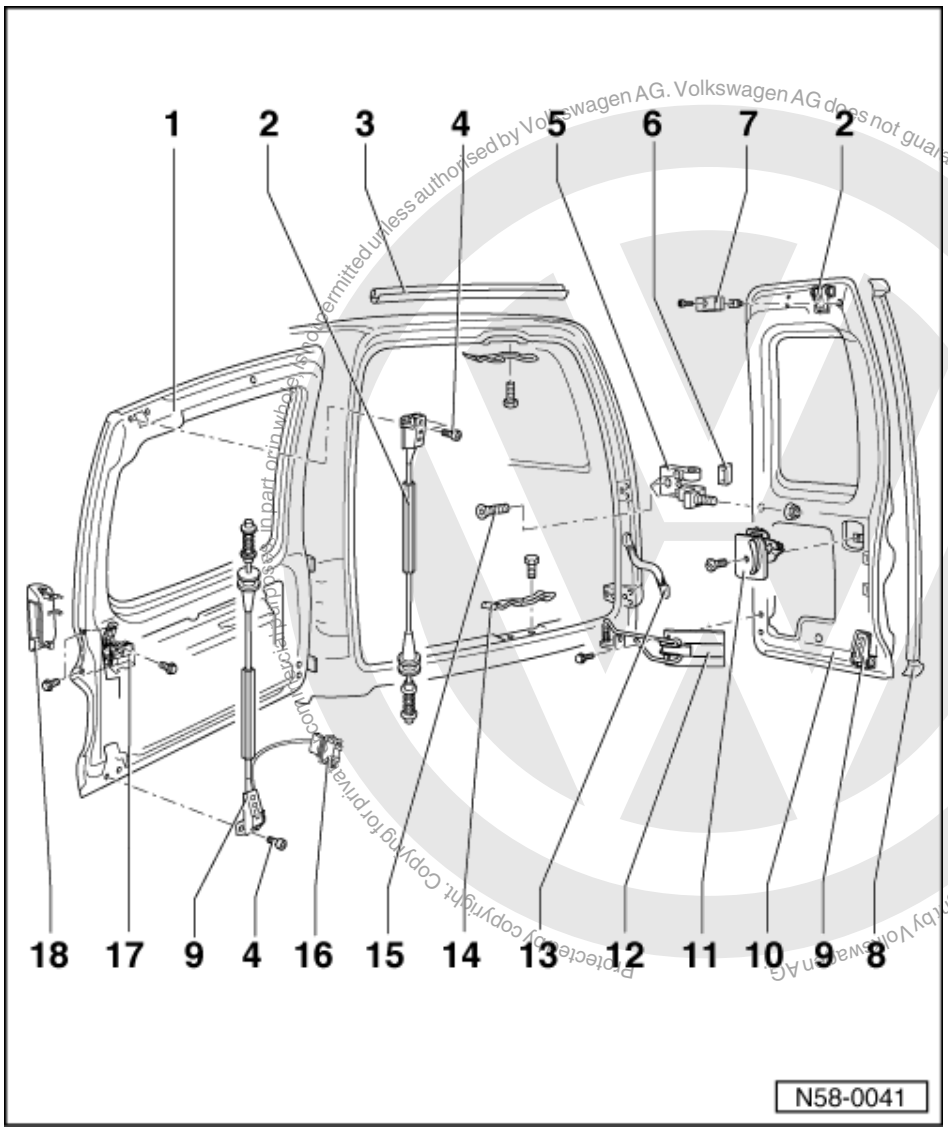

Copyright by Volkswagen AG. Volkswagen AG does not guarantee or accept any liability with respect to the correctness of information in this document. Copyright by Volkswagen AG. Protected by copyright. Copying for private and commercial purposes, in part or in whole, is not permitted unless authorised by Volkswagen AG.

15 Bolt

- For attaching hinge to D pillar

16 Connector

17 Door lock

- With operating mechanism
- Removing => Page 64
- Adjusting => Page 64

18 Door handle

- Removing:
- Remove bolts.
- Take off door handle.

satelettronica

1.3 - Adjusting rear wing door locks

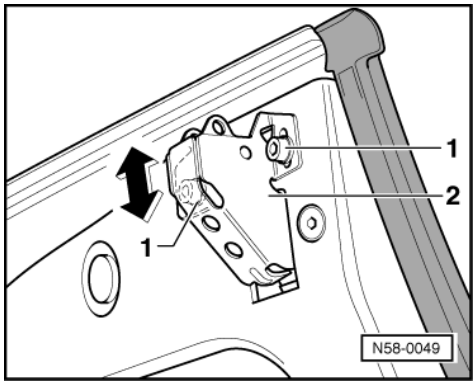

- Install upper and lower door locks.
- Hook door lock cables into door lock operating mechanism, but do not synchronize the cables at this moment => Page 66 .
- -> Tighten bolts -1- until the lock -2- can still just be moved within the elongated holes.
- Close wing door, so that the upper and lower door locks engage in the striker pins.

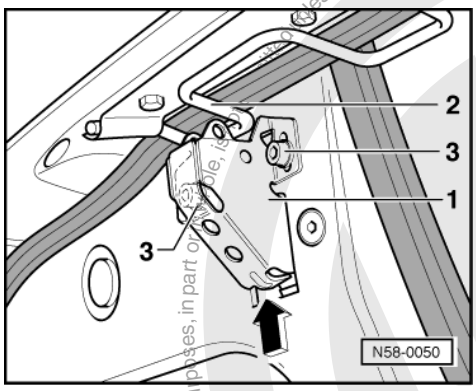

- -> Slide door lock -1- (upper and lower) as far as possible in direction of striker pin -2- and tighten bolts -3- in this position.
- Perform adjustment of door lock operating mechanism (synchronization of cables) => Page 66 .

Protected by copyright. Copyright by Volkswagen AG.
satelettronica

1.4 - Servicing left door lock operating mechanism

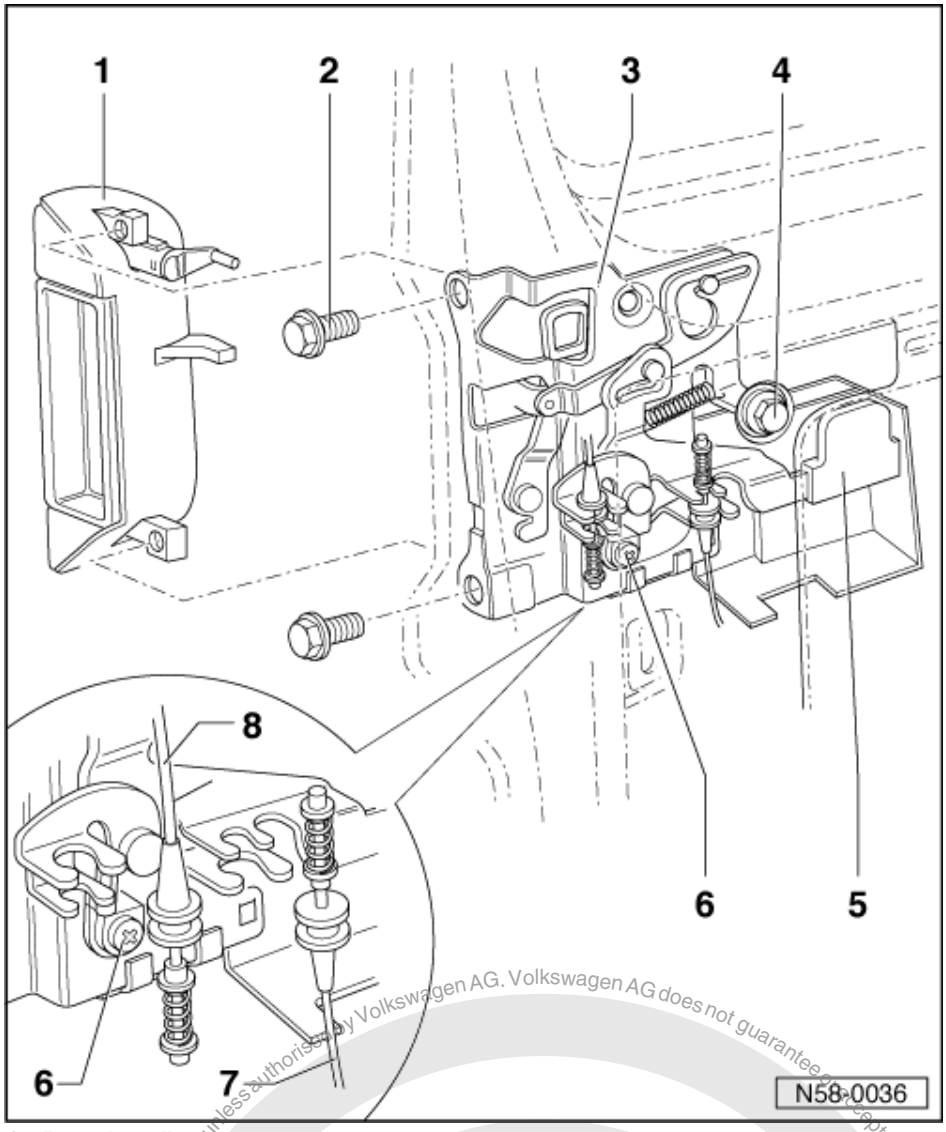

1 **Door handle**
- Removing:
- Remove bolts - 2 -.
- Take off door handle.

2 **Bolt**
- 10 Nm

3 **Door lock**
- Removing:
- Remove door trim

=> General body repairs, interior; Repair Group 70; Door trim Door trim

- Remove number plate right-hand light.

=> Electrical system; Repair group 94; Removing and installing number plate light Removing and installing number plate light

- Unhook cables - 7 - and - 8 -.
- Remove door handle - 1 -.
- Remove bolt - 4 -.

Protected by copyright. Copying for private or commercial purposes, in part or in whole, is not permitted unless authorised by Volkswagen AG. Volkswagen AG does not guarantee or accept any liability with respect to the correctness of information in this document. Copyright by Volkswagen AG.
satelettronica

- Take off door lock.

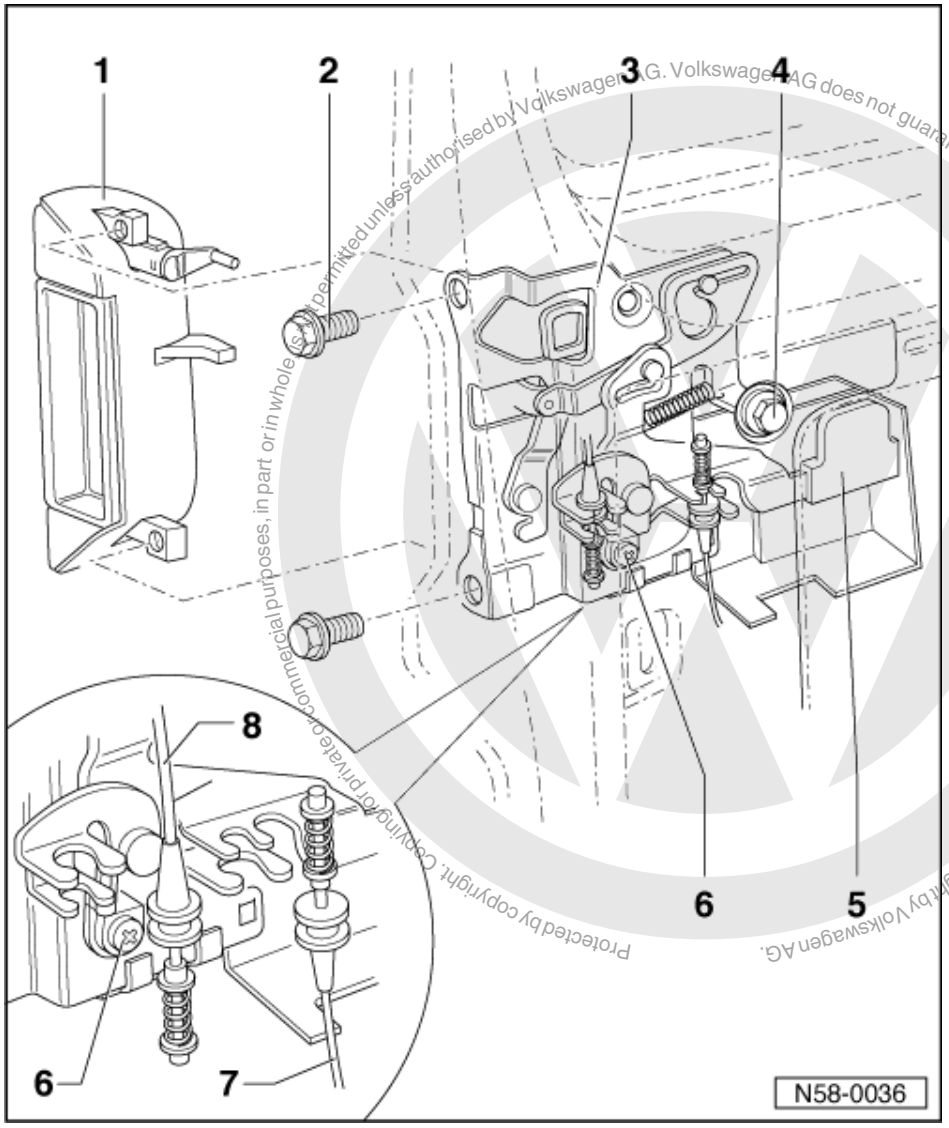

Protected by copyright. Copying for private or commercial purposes, in part or in whole, is not permitted unless authorised by Volkswagen AG. Volkswagen AG does not guarantee or accept any liability with respect to the correctness of information in this document. Copyright by Volkswagen AG.

satelettronica

- Installing:
- Install door lock.
- Attach cables - 7 - and - 8 -.
- Loosen bolt - 6 -.
- Pull interior release handle - 5 - until resistance is felt and tighten bolt - 6 -.

4 Bolt

5 Interior release handle
- 10 Nm

6 Bolt
- For adjustment of cables (synchronization)

7 Cable
- For lower door lock

8 Cable
- For upper door lock

1.5 - Servicing right door lock operating mechanism

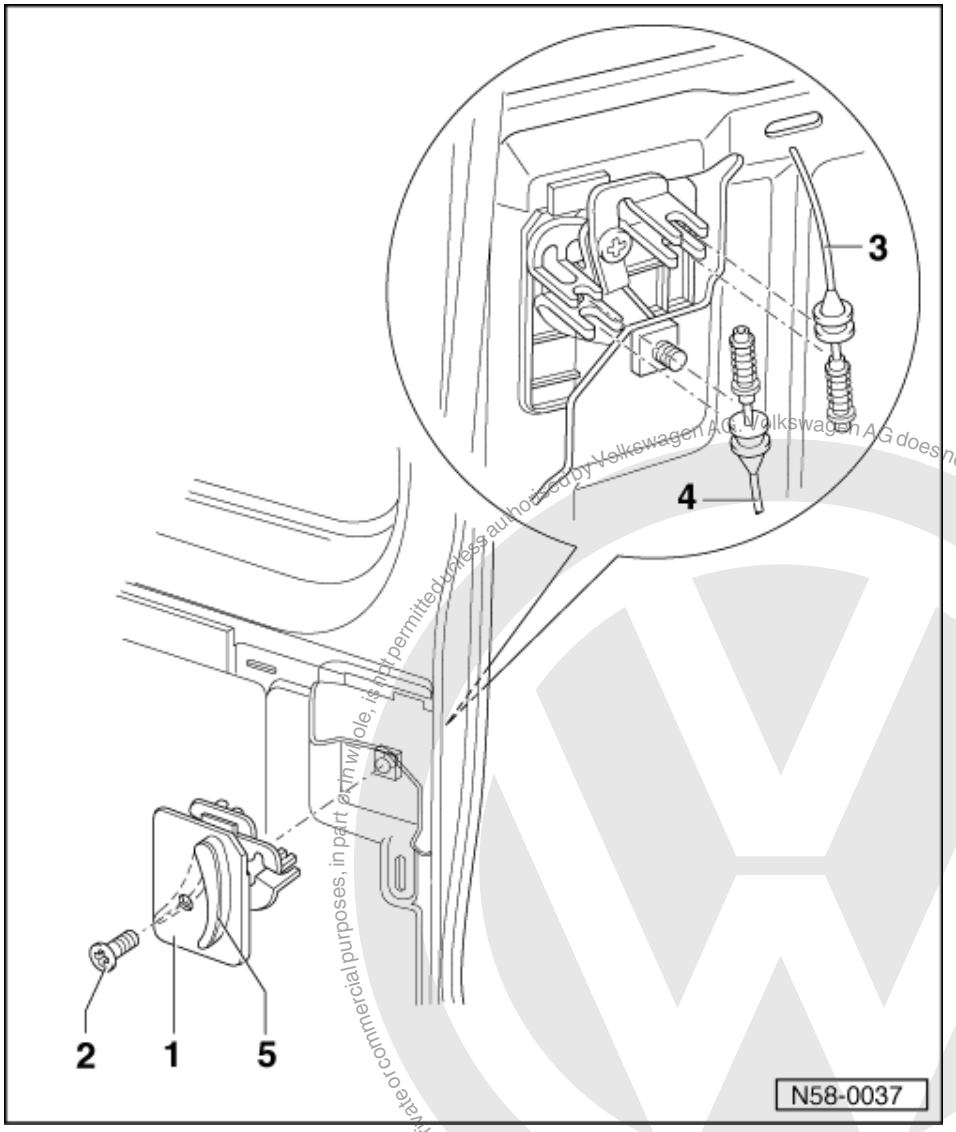

Protected by copyright. Copying for private or commercial purposes, in part or in whole, is not permitted unless authorised by Volkswagen AG. Volkswagen AG does not guarantee or accept any liability with respect to the correctness of information in this document. Copyright by Volkswagen AG.

satelettronica

1 Interior release handle
- ◆ With operating mechanism
- ◆ Removing:
- - Remove bolt - 2 - and take out interior release handle.
- - Unhook cables - 3 - and - 4 -.
- ◆ Installing:
- - Attach cables - 3 - and - 4 -.
- - Insert interior release handle.
- - Fit bolt - 2 - loosely.
- - Pull release handle -5- until resistance is felt and tighten bolt - 2 -.

2 Bolt
- ◆ For securing interior release handle and adjusting cables (synchronization)

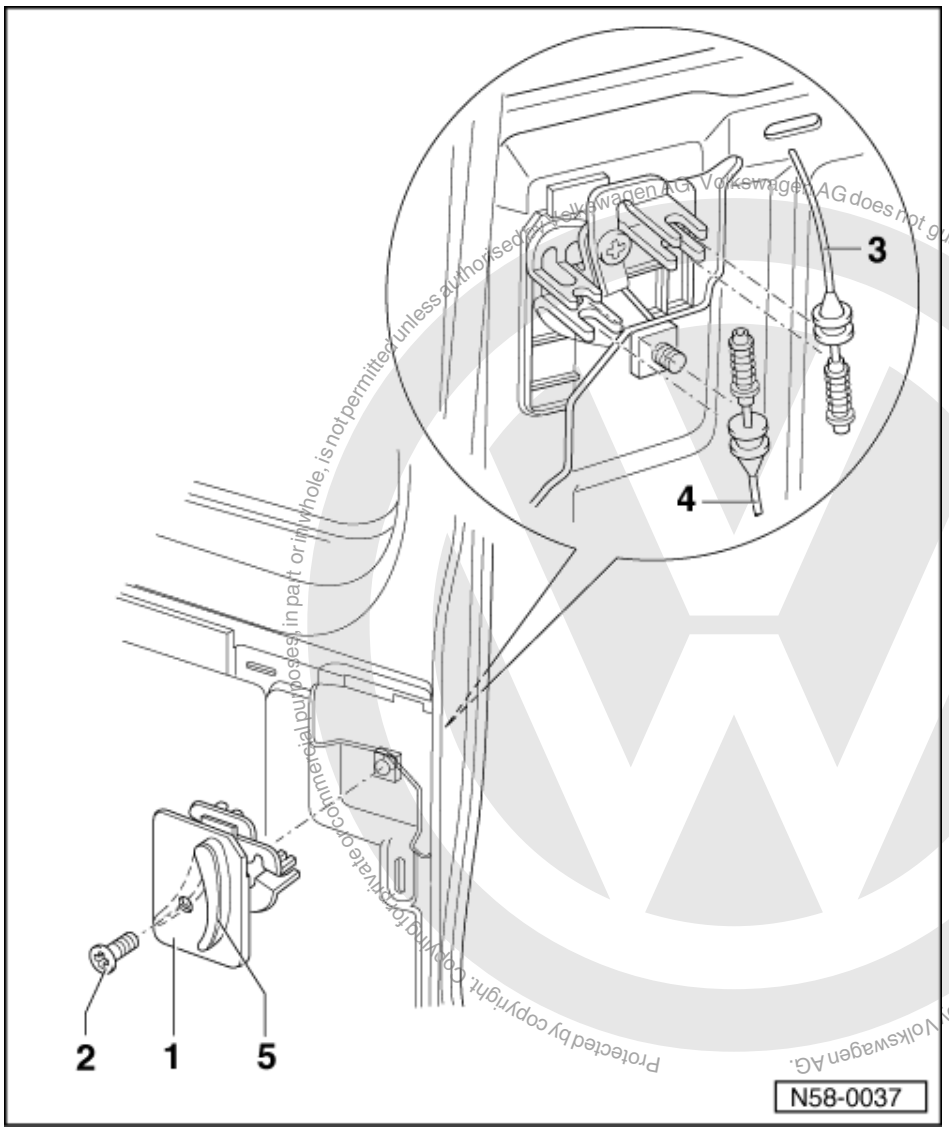

Protected by copyright. Copying for private or commercial purposes, in part or in whole, is not permitted unless authorised by Volkswagen AG. Volkswagen AG does not guarantee or accept any liability with respect to the correctness of information in this document. Copyright by Volkswagen AG.

satelettronica

3 Cable
- For upper door lock
- Can be unhooked on upper door lock => Page 58 , item 2

4 Cable
- For lower door lock
- Can be unhooked on lower door lock => Page 60 , item 9

5 Release lever

2 - Rear door (Polo Classic, Polo Estate)

2.1 - Rear door (Polo Classic, Polo Estate)

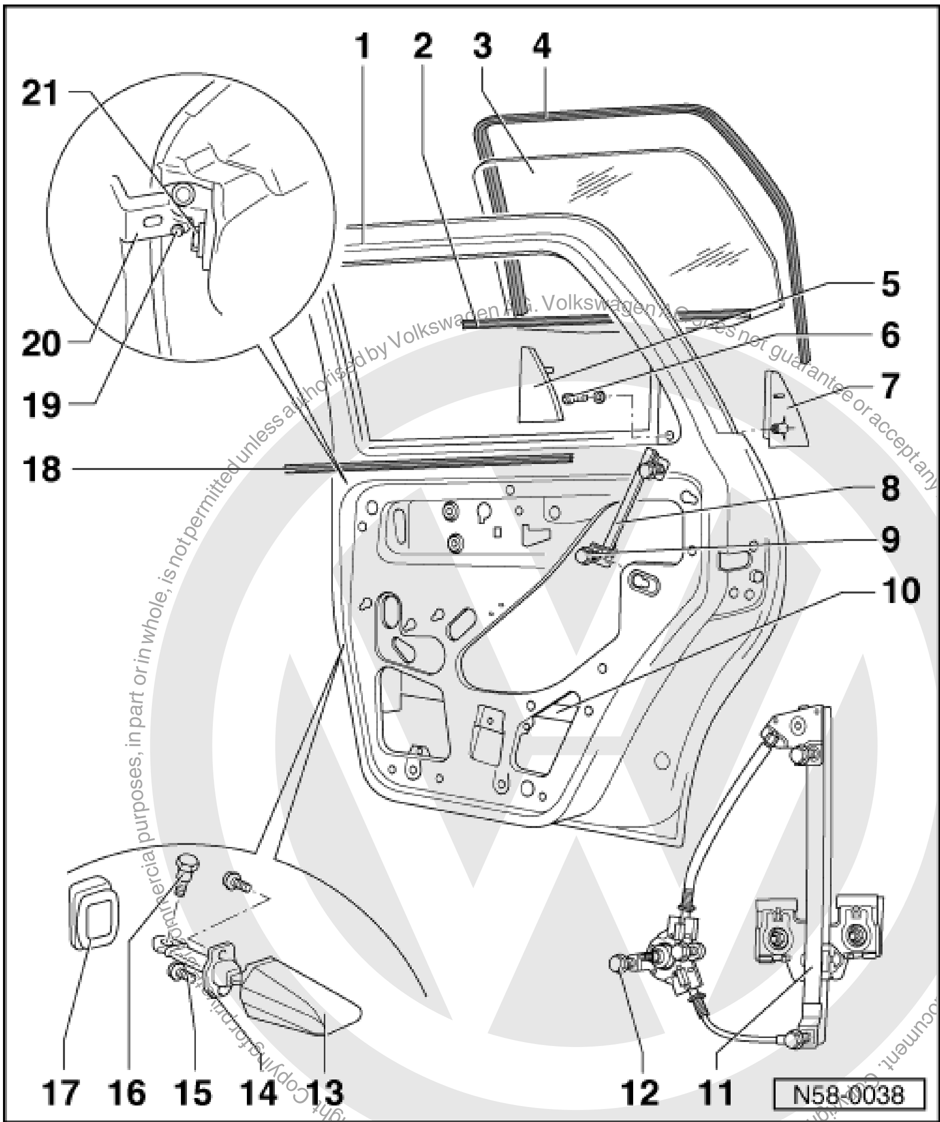

Protected by copyright. Copying for private or commercial purposes, in part or in whole, is not permitted unless authorised by Volkswagen AG. Volkswagen AG does not guarantee or accept any liability with respect to the correctness of information in this document. Copyright by Volkswagen AG.

2.2 - Rear door - Assembly overview

Note:

Illustration shows a Polo Classic. The Polo Estate door differs only slightly in the shape of the window.

1 Door
- Removing and installing => Page 25
- Adjusting =>Page 72

2 Window slot seal
- Pushed onto flange

3 Door window
- Removing for Polo Classic => Page 152

sateltronica

- Removing for Polo Estate => Page 153

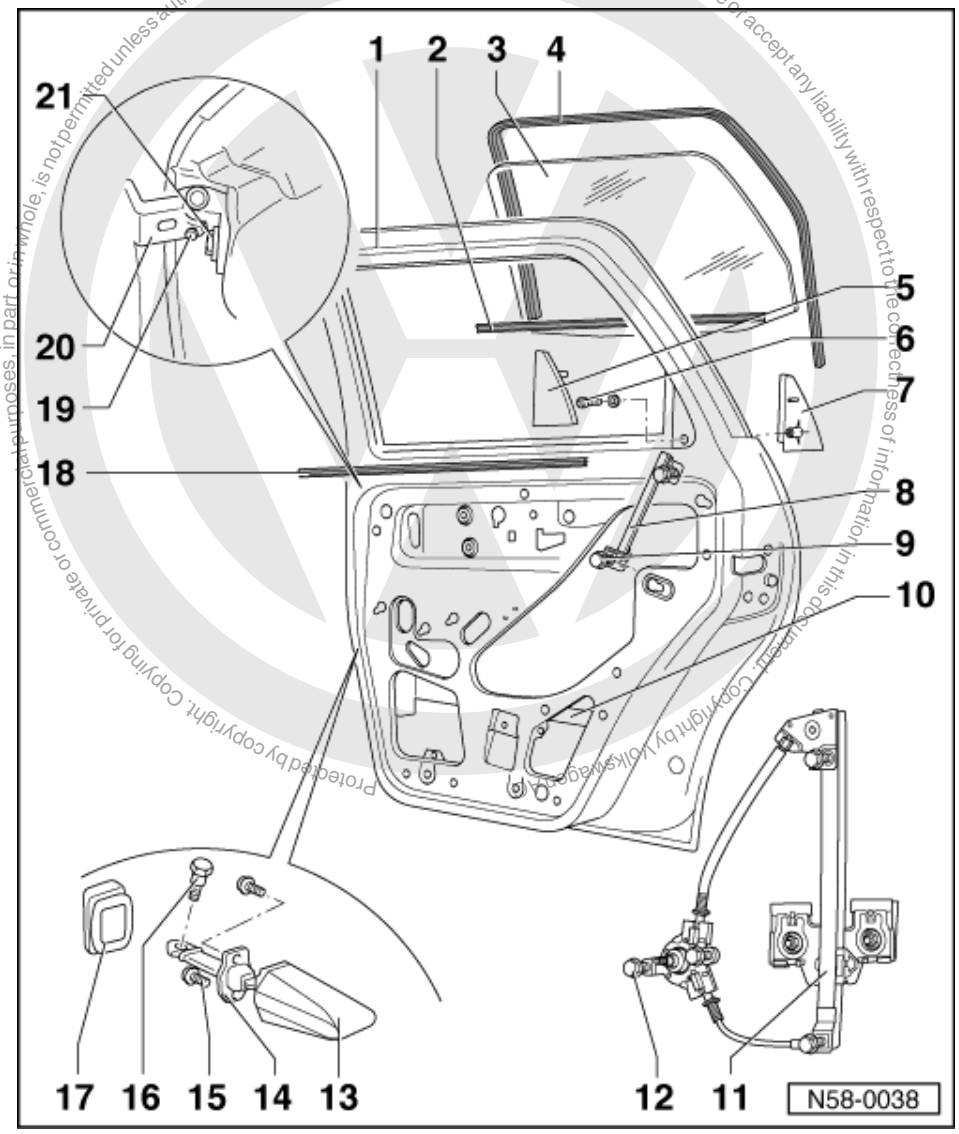

4 Window guide
- Buttoned into window frame

5 Cover
- Pull off of door frame (clipped in)

6 Bolt

7 Cover
- Polo Classic, screwed
- Polo Estate, pull off door frame (clipped in)

8 Window guide retainer
- Retains end of window guide - 4 -

9 Bolt
- 10 Nm
- Only loosened for removal of window guide retainer

10 Side impact bar
- Integrated in door

satelettronica

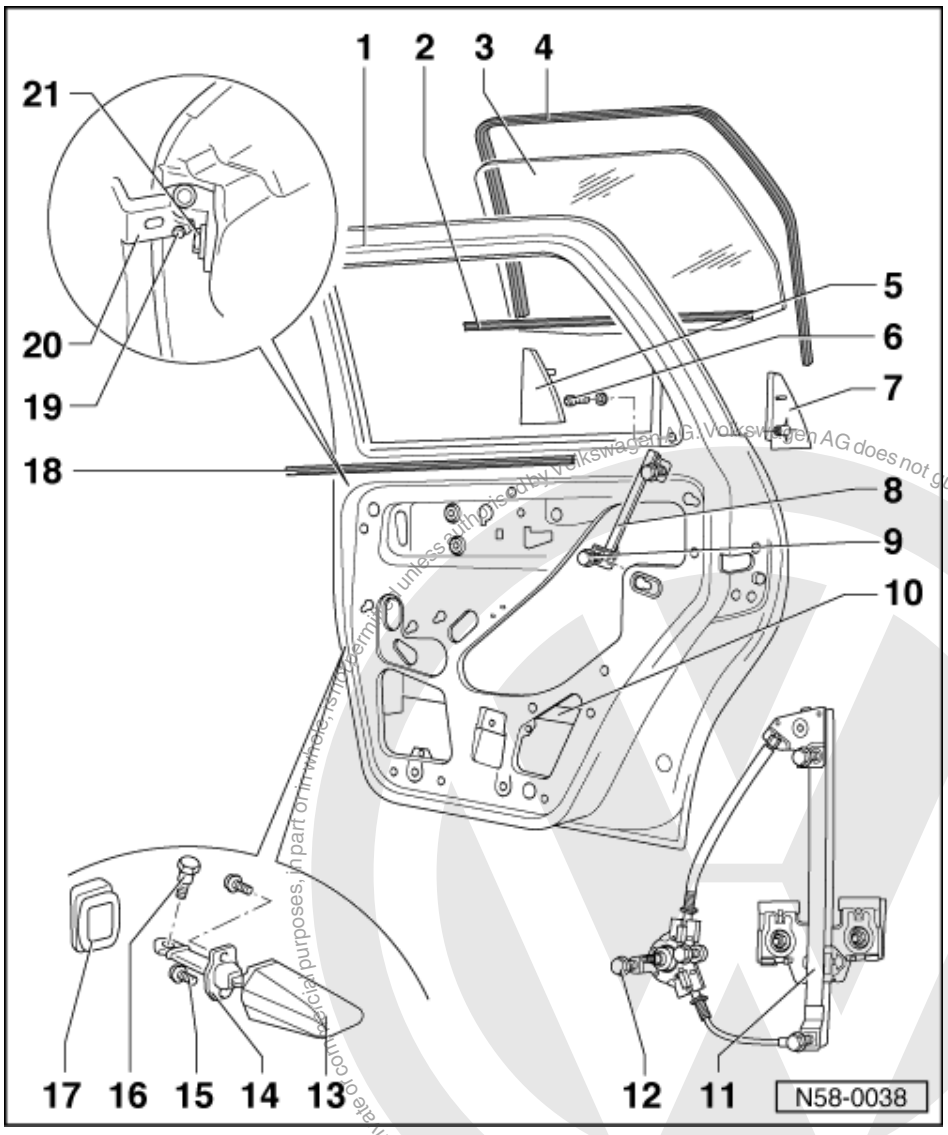

11 Window lifter
- Removing => Page 155

12 Bolt
- 10 Nm
- Loosened for removal of window lifter only

13 Door check strap sleeve

14 Door arrester

15 Bolt
- 7.5 Nm

16 Threaded pin
- 6.5 Nm

17 Door check strap cover
- Self-adhesive, stuck onto B pillar

18 Window slot seal
- Pushed onto flange

Protected by copyright. Copying for private or commercial purposes, in part or in whole, is not permitted unless authorised by Volkswagen AG. Volkswagen AG does not guarantee or accept any liability with respect to the correctness of information in this document. Copyright by Volkswagen AG.
satelettronica

Copyright by Volkswagen AG. Volkswagen AG does not guarantee or accept any liability with respect to the correctness of information in this document. Copying for private or commercial purposes, in part or in whole, is not permitted unless authorised by Volkswagen AG.

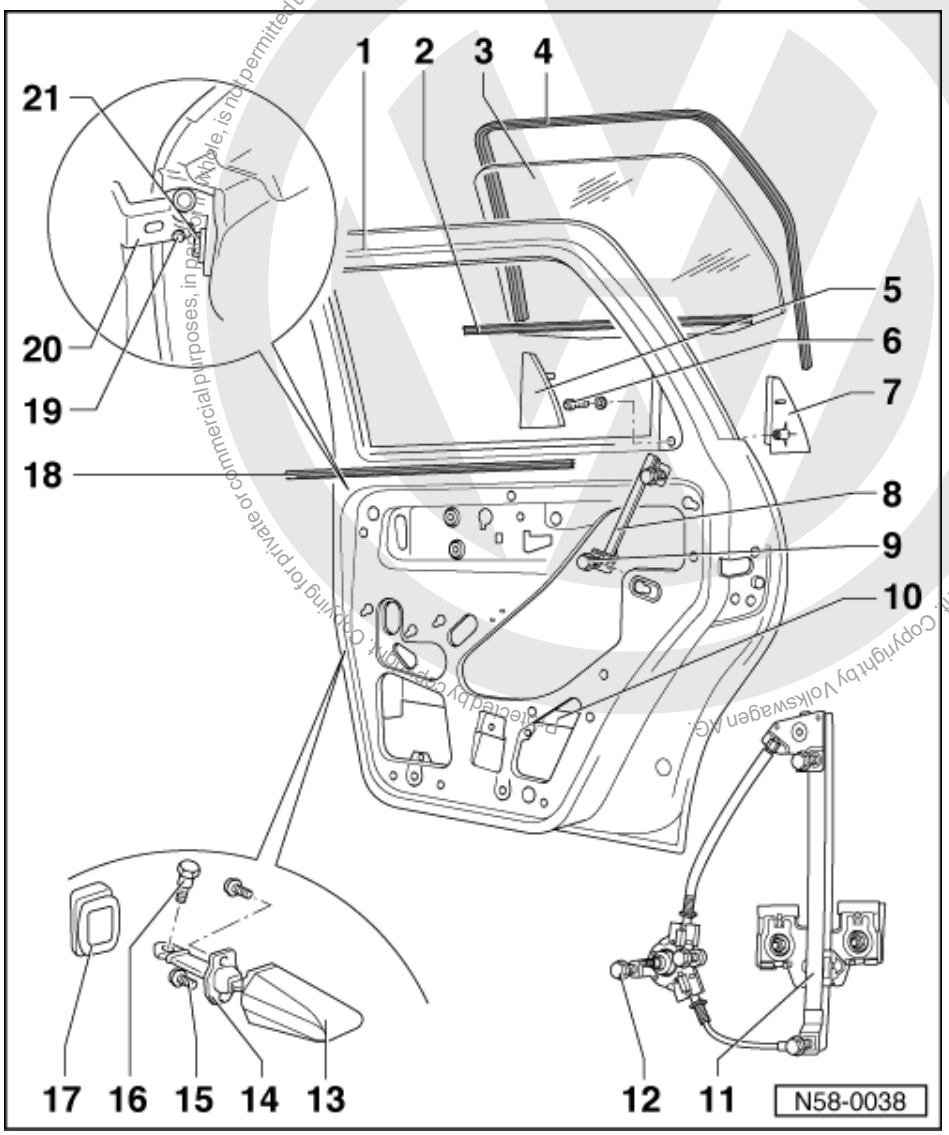

19 Grub screw
- 23 Nm

20 Door hinge
- Bolted to the door and B pillar (hinge pin inserted into box section and secured with grub screw.

21 Bolt
- 36 Nm

satelettronica

2.3 - Removing and installing door

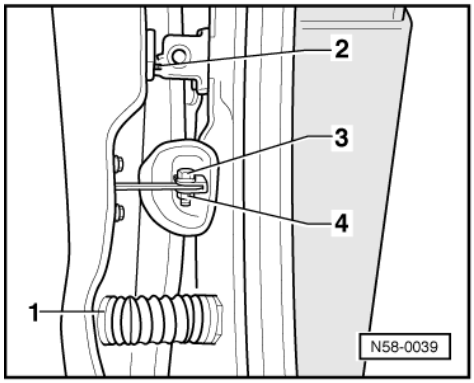

- -> Disconnect multi-pin plug -1- on B pillar which is inside bellows. Also disconnect bi-pressure pipe on vehicles with central locking.
- Remove pin -3- from welded nut -4-.
- Lever off cover cap -2- with screwdriver.
- Remove grub screw from upper and lower hinges.
- Grub screw tightening torque = 23 Nm.
- Lift door upwards out of hinge brackets.

2.4 - Adjusting door

To ensure a correct door adjustment the door hinges on the pillar must be loosened. Other measures such as raising the door upwards have no effect. Overpressuring thereafter will again cause the door to sack.

Adjusting

- The doors are correctly adjusted if the clearance to the door opening when closed is even all round, does not project too much to the inside or outside and the contours align.

Protected by copyright. Copying for private or commercial purposes, in part or in whole, is not permitted unless authorised by Volkswagen AG. Volkswagen AG does not guarantee or accept any liability with respect to the correctness of information in this document. Copyright by Volkswagen AG.
satelettronica

2.5 - Door handle - Assembly overview

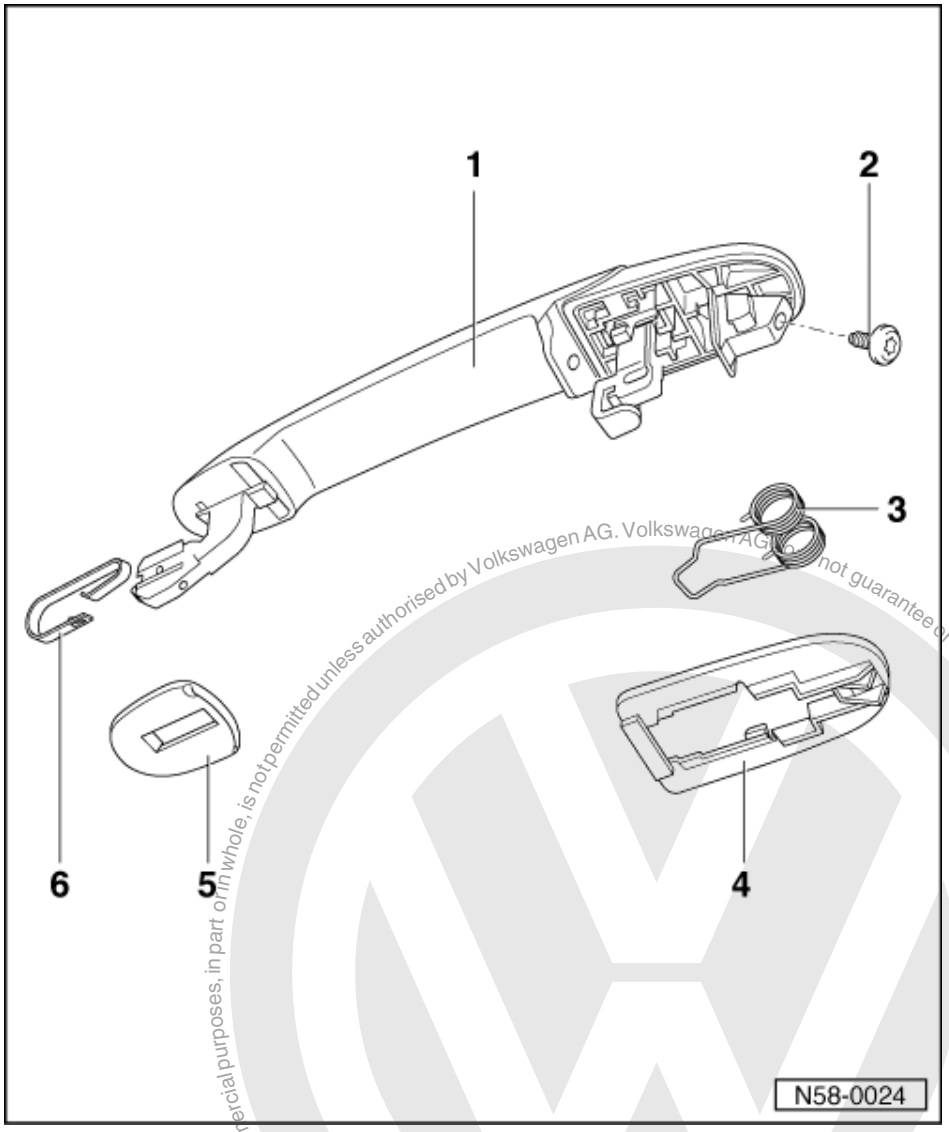

1 Door handle
- Removing and installing => Page 74 .

2 Bolt
- 8 Nm

3 Spring
4 Backing
5 Backing
6 Leaf spring

Protected by copyright. Copying for private or commercial purposes, in part or in whole, is not permitted unless authorised by Volkswagen AG. Volkswagen AG does not guarantee or accept any liability with respect to the correctness of information in this document. Copyright by Volkswagen AG.
satelettronica

2.6 - Removing and installing door handle

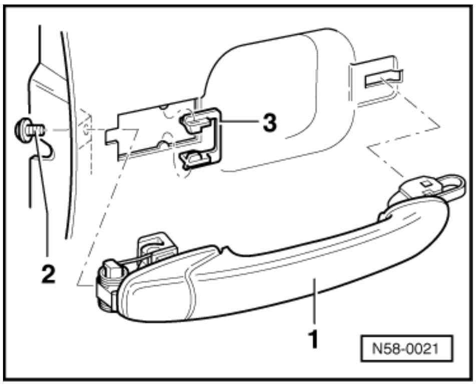

Removing

- -> Remove bolt -2-.
- Slide door handle -1- forwards, swing out downwards and remove from door.
- Check clip -3- for damage and renew if necessary.

Installing:

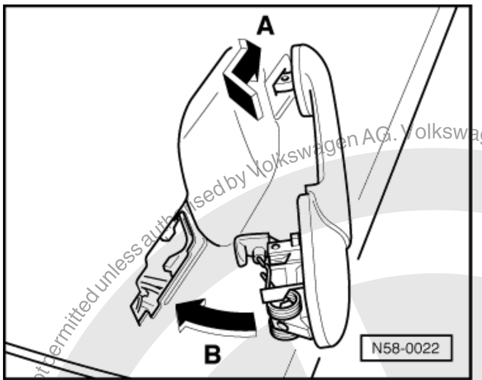

- Loosen door lock tolerance screws before installing the door handle.
- -> Insert door handle in door and slide forwards -arrow A- and swing into door -arrow B-.

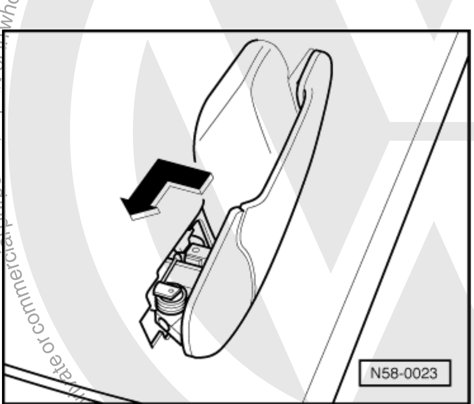

- -> Again push door handle forwards, press onto door outer panel and slide fully to rear.
- Fit bolt.
  Tightening torque: 8 Nm.

Proceed as follows if the door handle jams:

Protected by copyright. Copying for private or commercial purposes, in part or in whole, is not permitted unless authorised by Volkswagen AG. Volkswagen AG does not guarantee or accept any liability with respect to the correctness of information in this document. Copyright by Volkswagen AG.

satelettronica

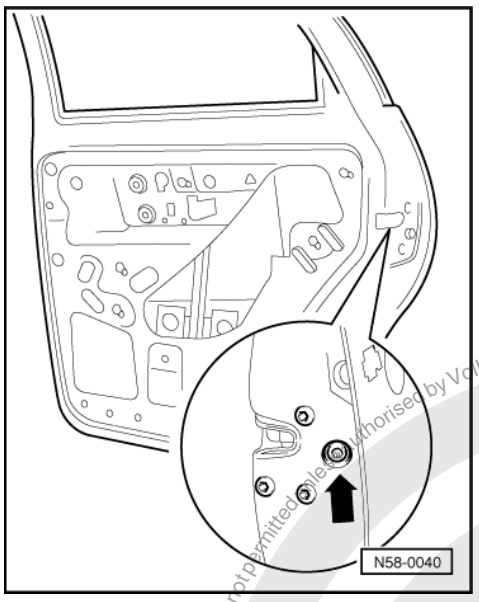

- -> Loosen door lock tolerance screw -arrow-.

Left-hand lock - right-hand thread
Right-hand lock - left-hand thread

- Tighten tolerance screw.
  Tightening torque = 3 Nm

Do not move tolerance screw sideways when tightening (e.g. by supporting the key on edge of hole). The door handle must be pushed onto door outer panel.

Tightening the tolerance screw also takes care of the adjustment.

2.7 - Removing inner release handle

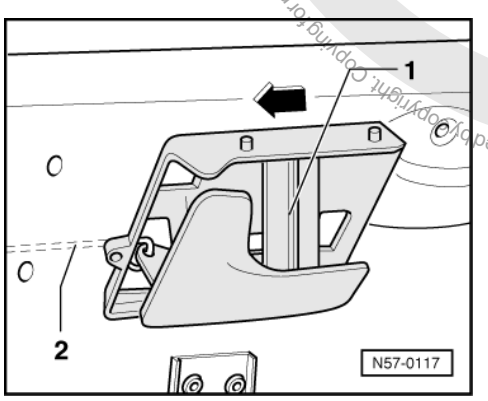

- Remove door trim.

=> General body repairs, interior; Repair group 70; Door trim Door trim

- Press inner release handle -1- to rear -arrow- and pull out of securing holes.
- Unhook rods -2-.

Protected by copyright. Copying for private or commercial purposes, in part or in whole, is not permitted unless authorised by Volkswagen AG. Volkswagen AG does not guarantee or accept any liability with respect to the correctness of information in this document. Copyright by Volkswagen AG.
satelettronica

2.8 - Servicing door lock with operating mechanism

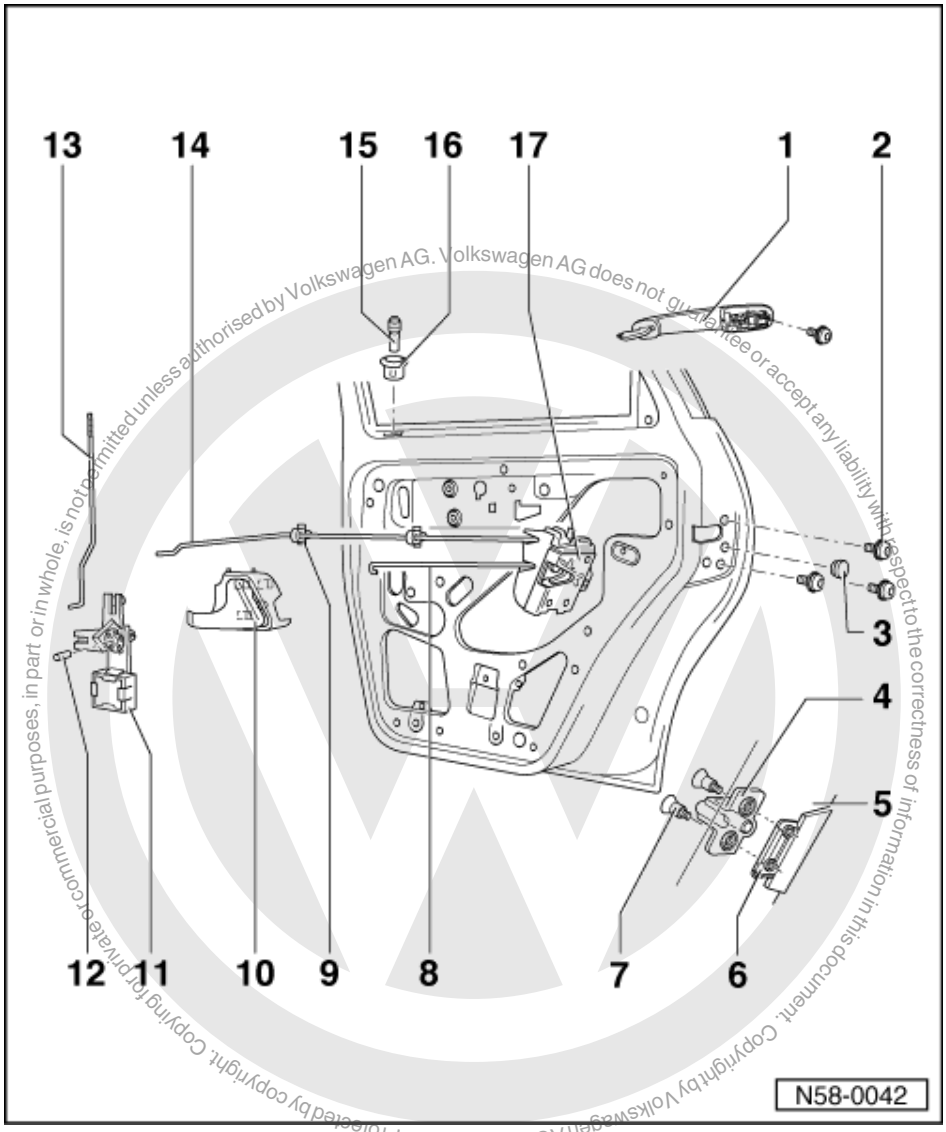

Protected by copyright. Copying for private or commercial purposes, in part or in whole, is not permitted unless authorised by Volkswagen AG. Volkswagen AG does not guarantee or accept any liability with respect to the correctness of information in this document. Copyright by Volkswagen AG.

1 Door handle
- Removing and installing => Page 74
- Lubricate with G 000 400 prior to installation

2 Bolt
- 8 Nm

3 Cover cap

4 Striker pin

5 C pillar

6 Threaded plate

7 Bolt
- 20 Nm

8 Pull rod

satelettronica

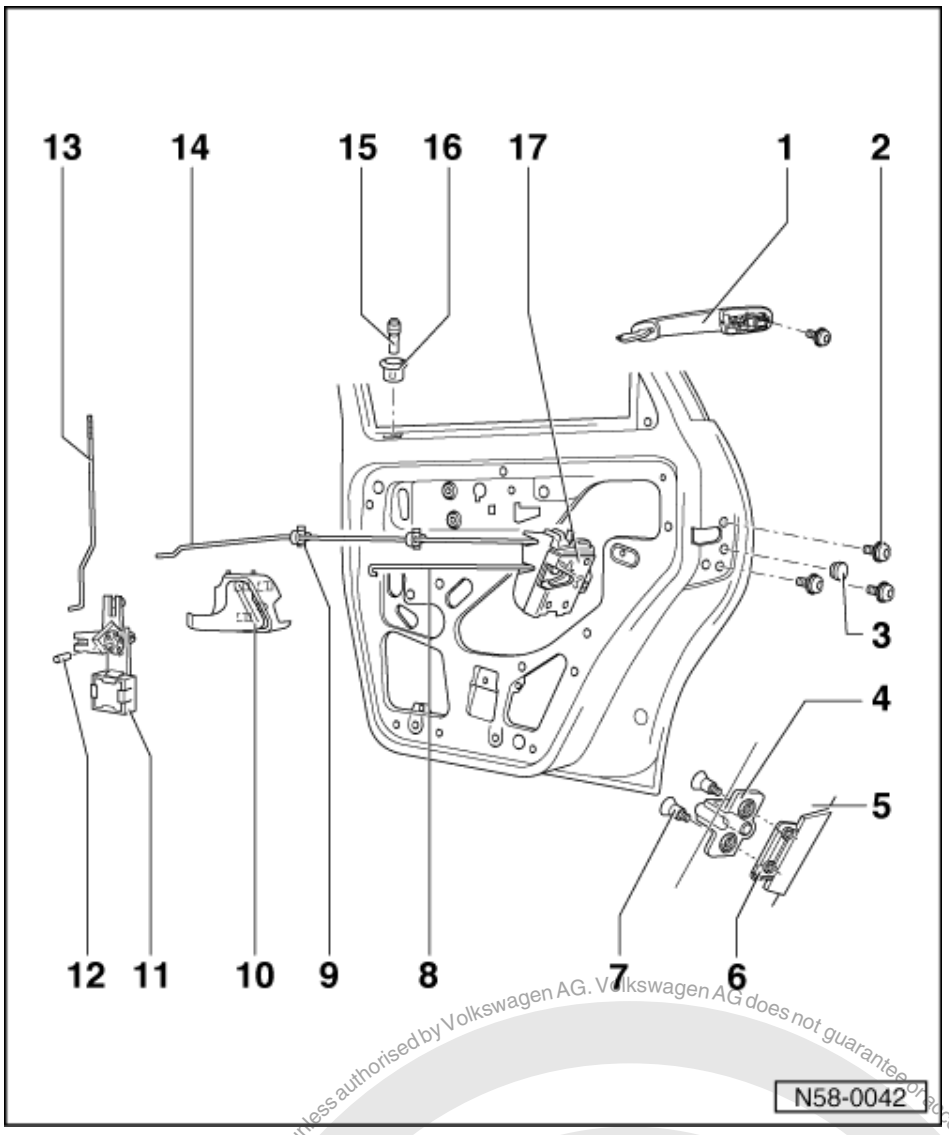

9 Clip
10 Interior release handle
- Removing =>Page 75

11 Angled lever
12 Expandable pin
13 Locking rod
14 Locking rod
15 Locking button
- Screwed on

16 Rosette
17 Door lock
- Removing and installing => Page 33
- Door window must be closed when removing and installing

satelettronica
Protected by copyright. Copying for private or commercial purposes, in part or in whole, is not permitted unless authorised by Volkswagen AG. Volkswagen AG does not guarantee or accept any liability with respect to the correctness of information in this document. Copyright by Volkswagen AG.

2.9 - Removing and installing door lock

Removing

Door window must be closed.

- Remove door handle.
- Remove door trim and door insulation sheeting.

=> General body repairs, interior; Repair group 70; Door trim Door trim

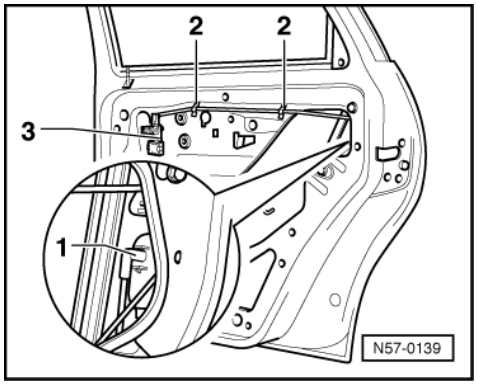

- -> Pull pressure pipe -1- off positioning element (for central locking only). Unhook locking rods securing clips -2-.

Note:

Pipes must be pushed approx. 1.5 cm into the pipe connections.

- Press relay lever -3- spreader pin out, take relay lever off door and unhook locking rod.
- Remove spreader pin from door (for refitting).

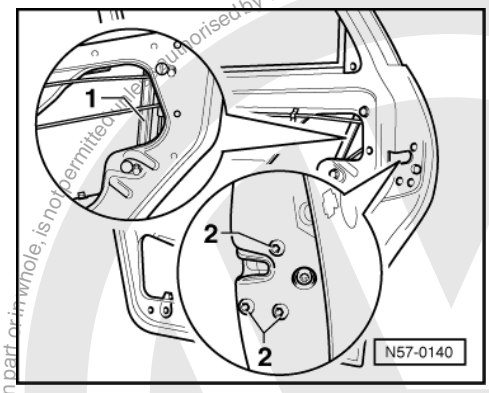

- -> Loosen window guide retainer -1- bolts and unhook guide retainer in door.
- Remove bolts -2-
  Tightening torque: 8 Nm.
- Lift door lock out through installation opening and unhook pull rod and locking rod on door lock.

satelettronica
Protected by copyright. Copying for private or commercial purposes, in part or in whole, is not permitted unless authorised by Volkswagen AG. Volkswagen AG does not guarantee or accept any liability with respect to the correctness of information in this document. Copyright by Volkswagen AG.

60 - Sliding/tilting roof

1 - Sliding/tilting roof with glass panel >09.99

1.1 - Sliding/tilting roof with glass panel >09.99

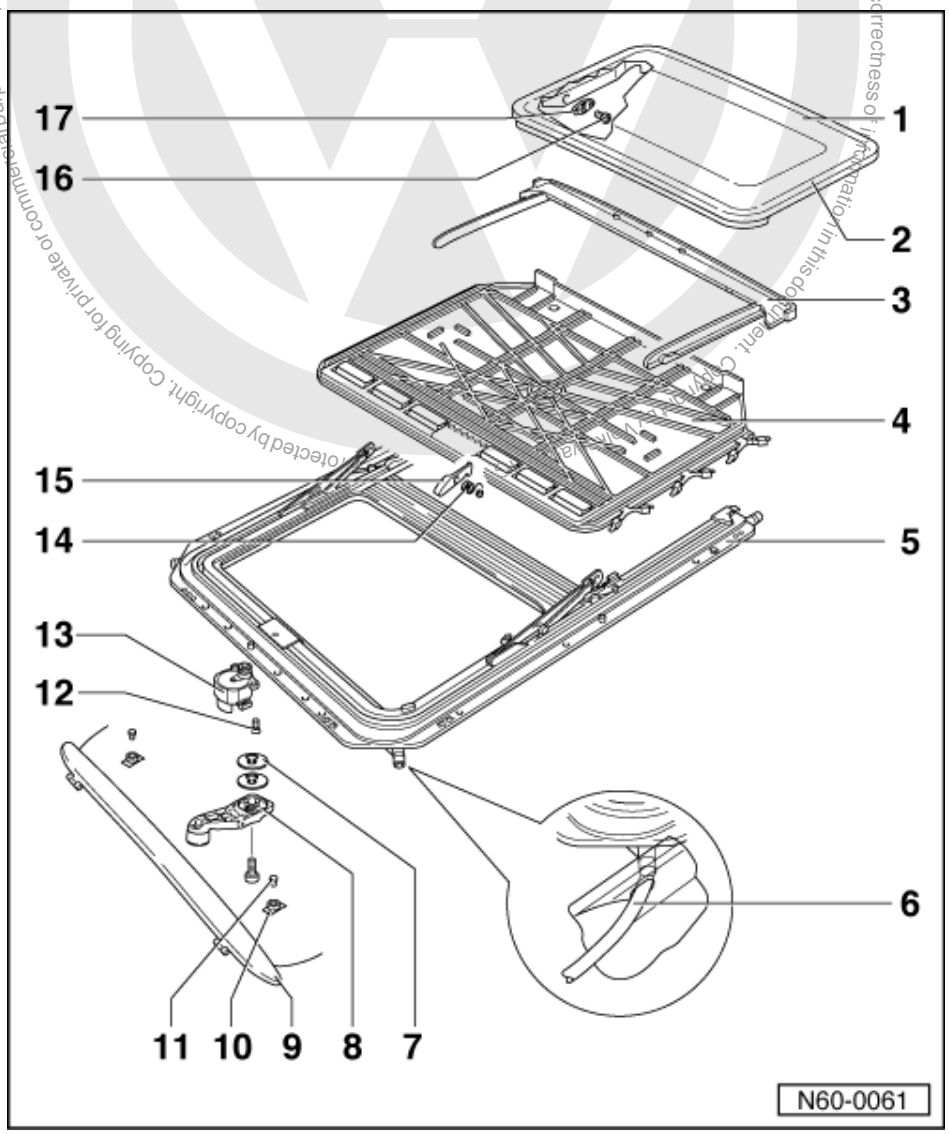

1.2 - Sliding/tilting roof with glass panel - Assembly overview

1 Glass panel for sliding/tilting roof (single pane safety glass)
- Removing sliding/tilting roof glass panel => Page 83
- Installing sliding/tilting roof glass panel => Page 83
- Adjusting sliding/tilting roof glass panel => Page 84

2 Panel seal
- Adjusting panel seal => Page 85
- Seal joint is in centre of right side section

satelettronica

- Treat panel seal clamping channel with water as lubricant before fitting

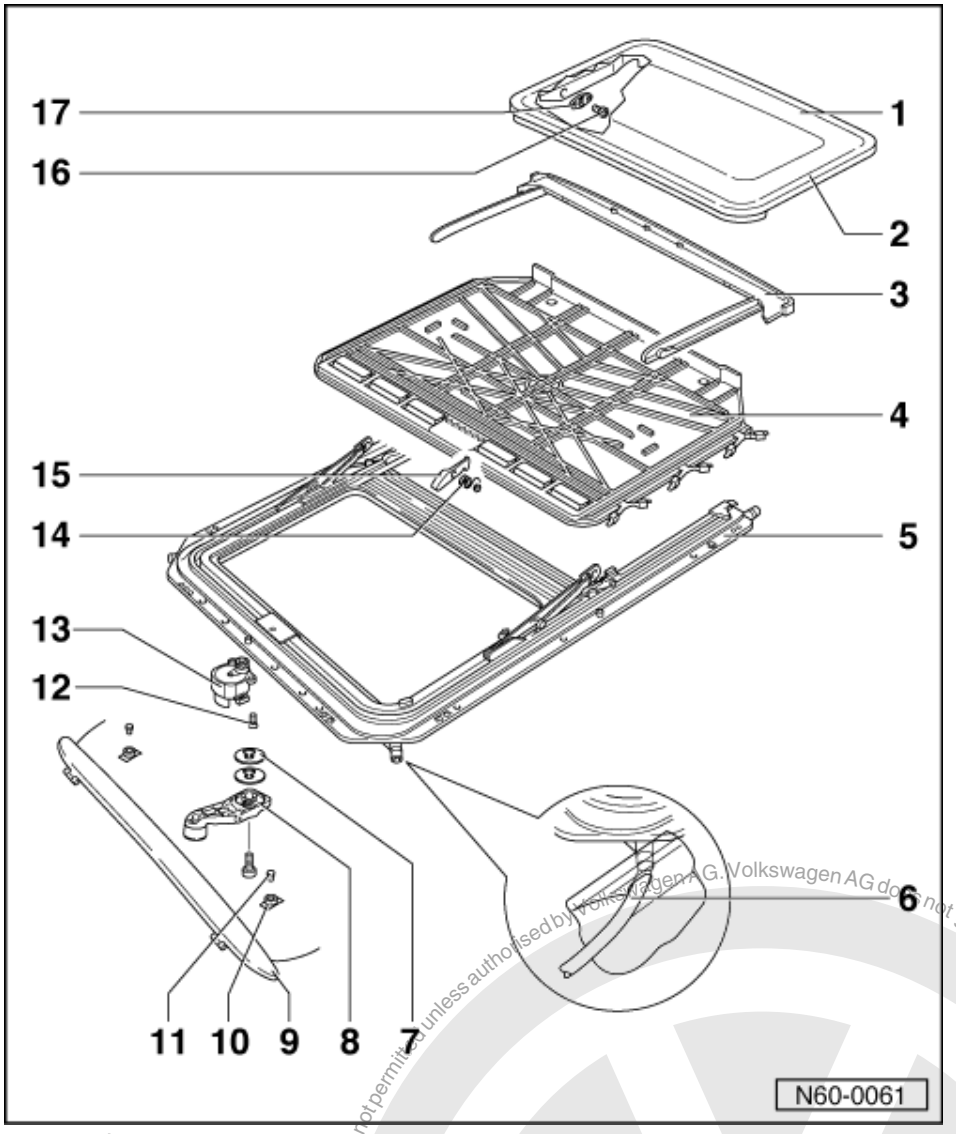

3 Trim frame
- Removing trim frame => Page 83 , removing sliding/tilting roof glass panel

4 Sliding headlining
- Removing and installing sliding headlining =>Page 87

5 Carrier unit
- Removing and installing carrier unit =>Page 88
- Carrier unit consists of the following parts:
- U frame (with guide channels)
- Rear guides with cables
- Front guides
- If required, guide channels are to be greased with special grease G 000 450 02 only, otherwise correct operation cannot be guaranteed.

Protected by copyright. Copying for private or commercial purposes, in part or in whole, is not permitted unless authorised by Volkswagen AG. Volkswagen AG does not guarantee or accept any liability with respect to the correctness of information in this document. Copyright by Volkswagen AG.
satelettronica

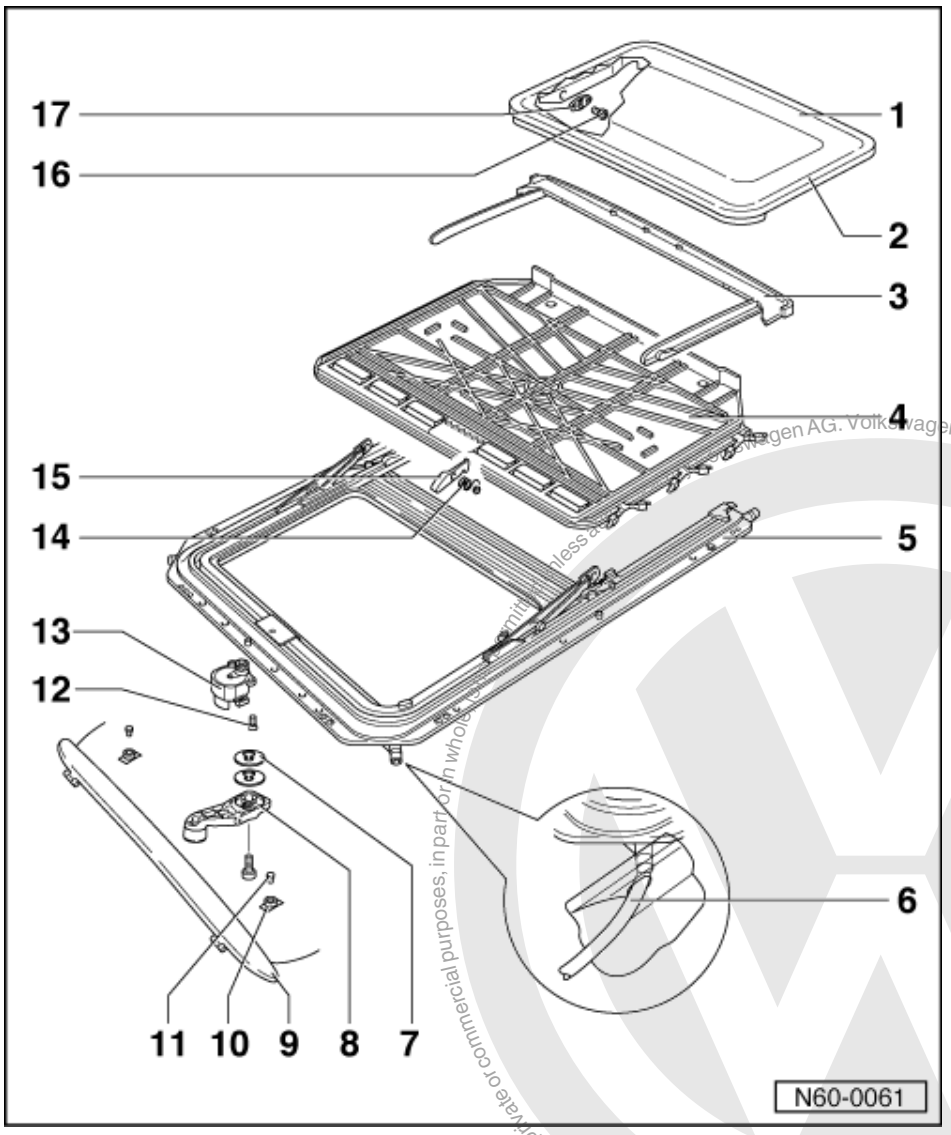

6 Water drain hose
- Cleaning water drain hose => Page 91

7 Friction plate

8 Hand crank

9 Wind deflector
- Open panel to rear and unscrew wind deflector

10 Threaded formed piece
- Thread must be at an angle to rear

11 Wind deflector securing screws

12 Countersunk screws (micro encapsulated)
- Always use new countersunk screws
- 3 Nm

Protected by copyright. Copying for private or commercial purposes, in part or in whole, is not permitted unless authorised by Volkswagen AG. Volkswagen AG does not guarantee or accept any liability with respect to the correctness of information in this document. Copyright by Volkswagen AG.
satelettronica

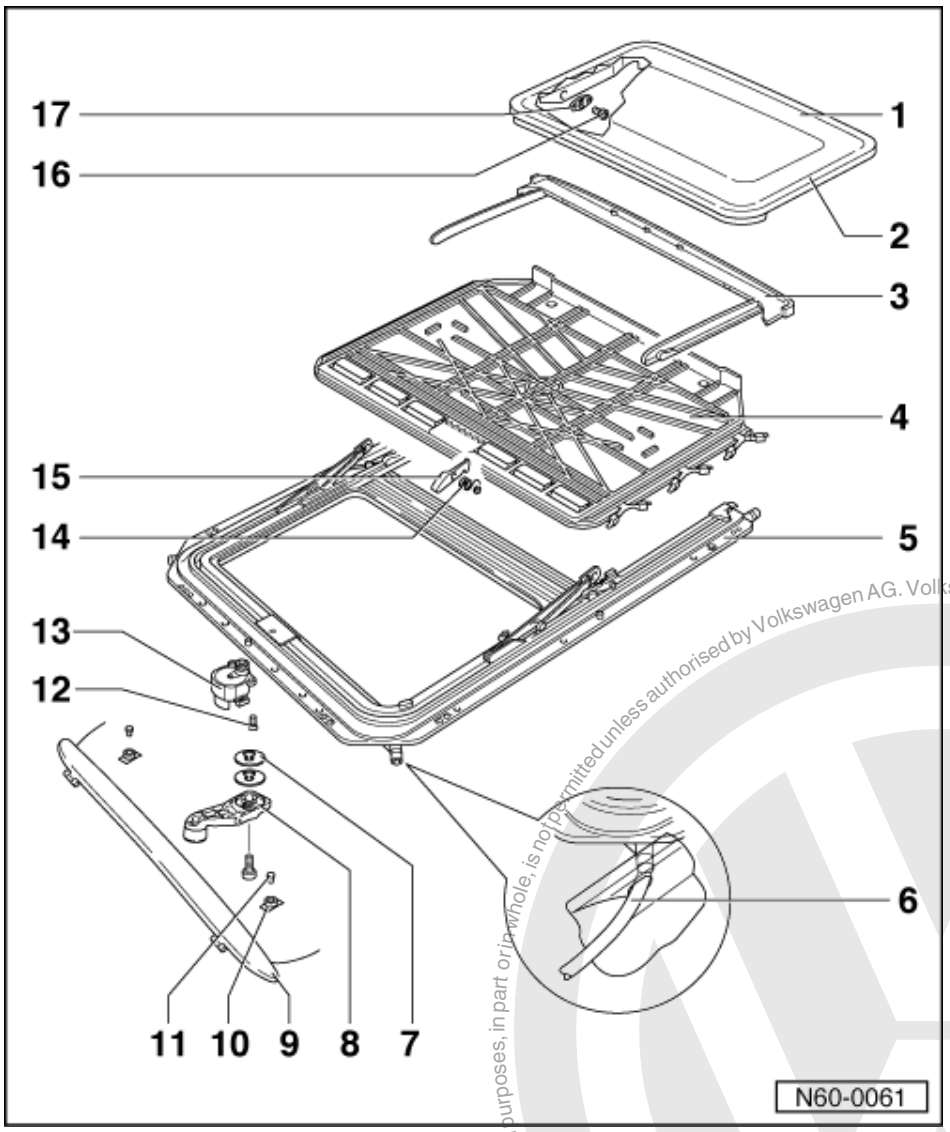

13 Drive unit (manual)
14 Locating hook spring
15 Locating hook
16 Torx screw
- Torx key T 25
- 6 Nm

17 Adjusting plate
- Part of link piece guide

Protected by copyright. Copying for private or commercial purposes, in part or in whole, is not permitted unless authorised by Volkswagen AG. Volkswagen AG does not guarantee or accept any liability with respect to the correctness of information in this document. Copyright by Volkswagen AG.
satelettronica

1.3 - Removing sliding/tilting roof glass panel

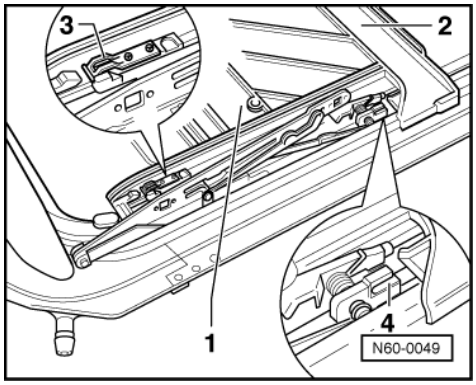

- Tilt sliding/tilting roof open.
- -> Slide sliding headlining -1-to rear.
- Slide trim frame -2- to rear (clipped on in area of front guide -3- and guided at rear by lugs -4-).

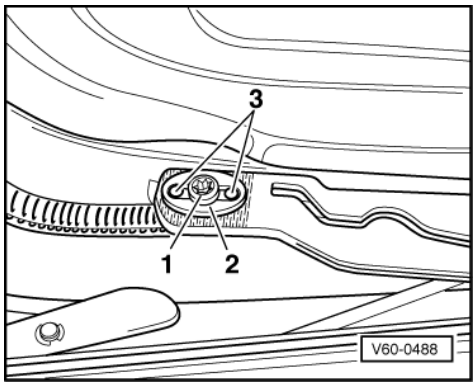

- -> Remove securing screw -1- (Torx key T 25).
- Take glass panel out upwards.
- Pull trim frame (if required) forwards and upwards out of roof cut-out.

1.4 - Installing sliding/tilting roof glass panel

Glass panel must be installed in 0 position (panel closed).

- Check and if necessary adjust parallel running => Page 85 .

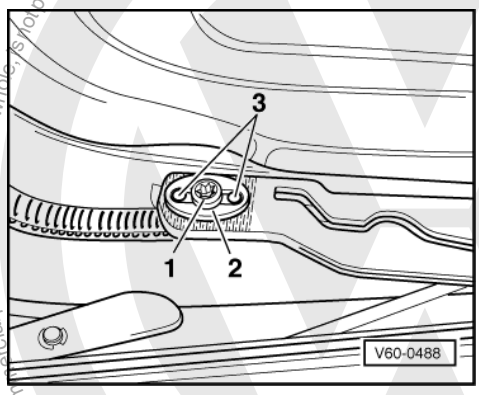

- -> Insert glass panel for sliding/tilting sun roof from above and screw in securing screws -1- with adjustment plates -2-. When doing this ensure that the centralizing pins -3- on reverse of adjustment plates locate correctly.

Protected by copyright. Copying for private or commercial purposes, in part or in whole, is not permitted unless authorised by Volkswagen AG. Volkswagen AG does not guarantee or accept any liability with respect to the correctness of information in this document. Copyright by Volkswagen AG.
satelettronica

Tightening torque: 6 Nm

Note:

After adjusting panel height tighten securing screws (6 Nm).

- Performing height adjustment =>Page 84 .
- Checking and if necessary adjusting seating of the panel seal => Page 85 .
- Slide trim frame forwards and clip in.
- Check that sliding/tilting roof operates trouble-free.

1.5 - Sliding/tilting roof glass panel (height adjustment)

- Tilt glass panel open.
- Fully push back sliding headlining.
- Push trim frame to rear (clipped-on in area of front guide and guided at rear by a pack).
- Check and if necessary adjust parallel running => Page 85 .
- Run glass panel into "closed" position.
- Loosen all four screws on glass panel (floating alignment in roof cut-out).

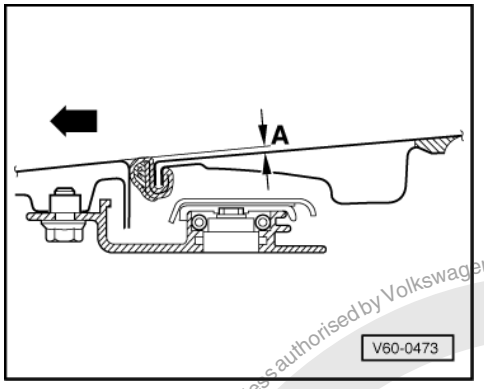

- Carry out height adjustment of glass panel at front and rear on both sides as follows:

-> Panel adjustment front:

a = 1 mm lower than roof

Arrow = Direction of travel (forwards)

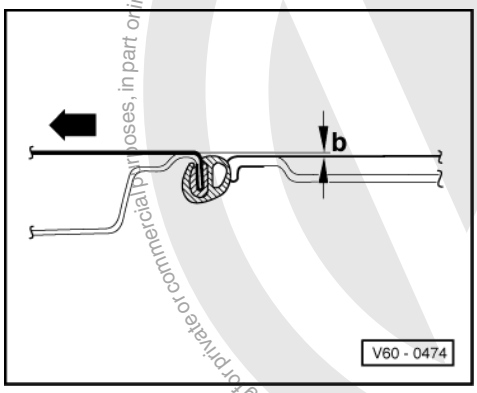

-> Panel adjustment rear:

b = 1 mm higher than roof

Arrow = Direction of travel (forwards)

Protected by copyright. Copying for private or commercial purposes, in part or in whole, is not permitted unless authorised by Volkswagen AG. Volkswagen AG does not guarantee or accept any liability with respect to the correctness of information in this document. Copyright by Volkswagen AG.
satelettronica

- Tighten screws of glass panel (6 Nm).
- Slide trim frame forwards and clip in (clipped-in in the front frame area and guided at rear by pack).

1.6 - Adjusting panel seal

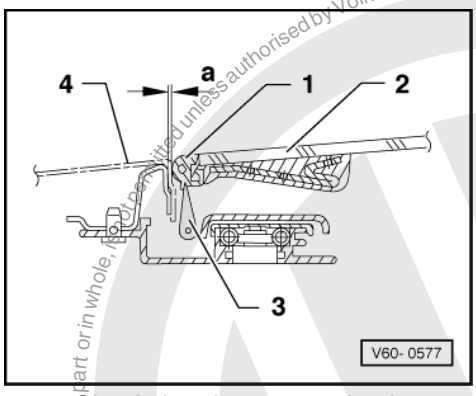

- -> Check that the pre-tension between panel seal -1- and body -4- is uniform all-round using a 0.3 mm thick strip of paper (a = 0.3 mm, a visiting card for example). It must be possible to pull the paper strip through between the panel seal and body under tension.
- If the pre-tension is too low, the panel seal can be pushed apart with a wedge -3-, or if the pre-tension is too high pushed together. To adjust the panel seal the glass panel -2- must be removed =>Page 83 .

1.7 - Checking and adjusting parallel running

Checking

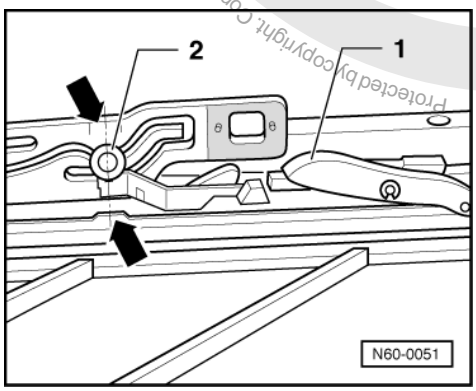

- Run glass panel into "closed" position.
- Push sliding headlining fully back by hand.
- Push trim frame to rear (clipped-on in area of front guide and guided at rear by a pack).

-> Locating hooks (with roller) -1- must be located in the guide rails.

Pin -2- must be within the marks (notches) -arrows-.

Protected by copyright. Copying for private or commercial purposes, in part or in whole, is not permitted unless authorised by Volkswagen AG. Volkswagen AG does not guarantee or accept any liability with respect to the correctness of information in this document. Copyright by Volkswagen AG.
satelettronica

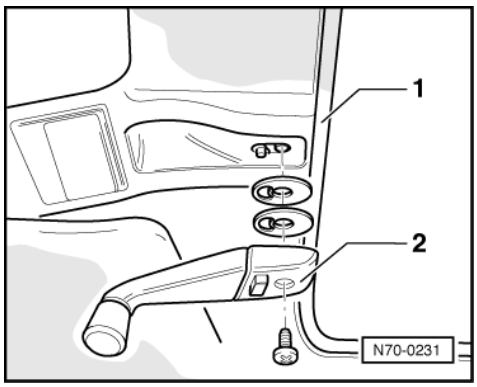

If this is not the case, adjust parallel running as follows:

Adjusting

- -> Pull off weather strip -1- around edge of sliding/tilting roof opening with panel open.
- Remove crank -2-.

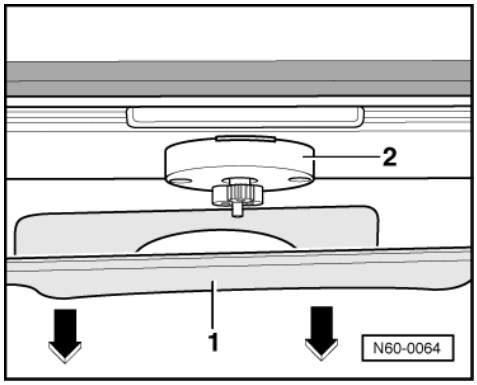

- -> Pull moulded headlining -1- in area of drive carefully down off roof and unscrew drive -2- using a short screwdriver.

Note:

The drive pinion must no longer be in mesh with the cables.

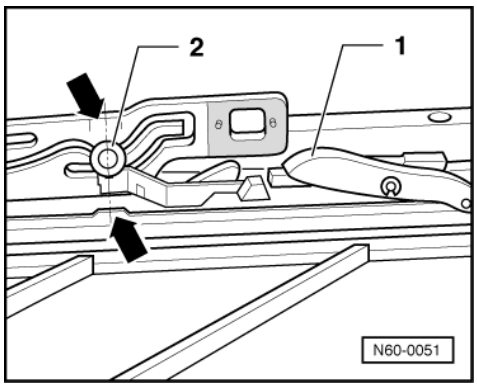

-> Locating hooks (with roller) -1- must be located in the guide rails.

- Slide rear guides with pins -2- from front to rear only, to between the notches -arrows-.
- Install drive (0 position) when in this position.
- Always use new screws (securing screws are micro-encapsulated) 3 Nm.

satelettronica
Protected by copyright. Copying for private or commercial purposes, in part or in whole, is not permitted unless authorised by Volkswagen AG. Volkswagen AG does not guarantee or accept any liability with respect to the correctness of information in this document. Copyright by Volkswagen AG.

1.8 - Removing sliding headlining

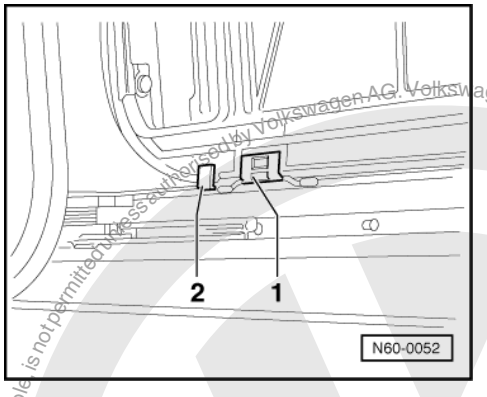

Sliding/tilting roof glass panel and trim frame removed and sliding/tilting roof unit in "closed position".

- -> Unclip stop -2- on one side and press headlining towards this side. Lever slide -1- out of the guide channel, on the opposite side, (from front to rear) with a screwdriver.
- Swing headlining out of assembly unit.

1.9 - Installing sliding headlining

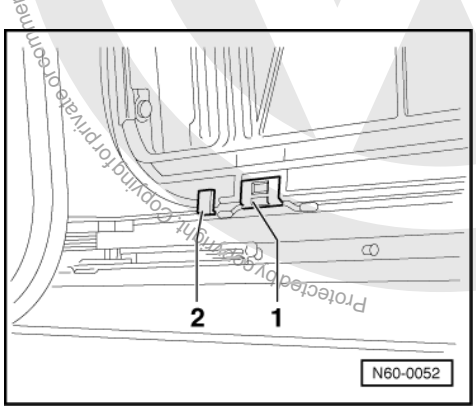

- -> Insert sliding headlining in the roof cut-out. Insert sliding headlining slide in guide channel (slide engaged into sliding headlining). Insert slide -1- on opposite side into guide channel and fit the side stops -2-.

Protected by copyright. Copying for private or commercial purposes, in part or in whole is not permitted unless authorised by Volkswagen AG. Volkswagen AG does not guarantee or accept any liability with respect to the correctness of information in this document. Copyright by Volkswagen AG.
satelettronica

1.10 - Removing and installing carrier unit

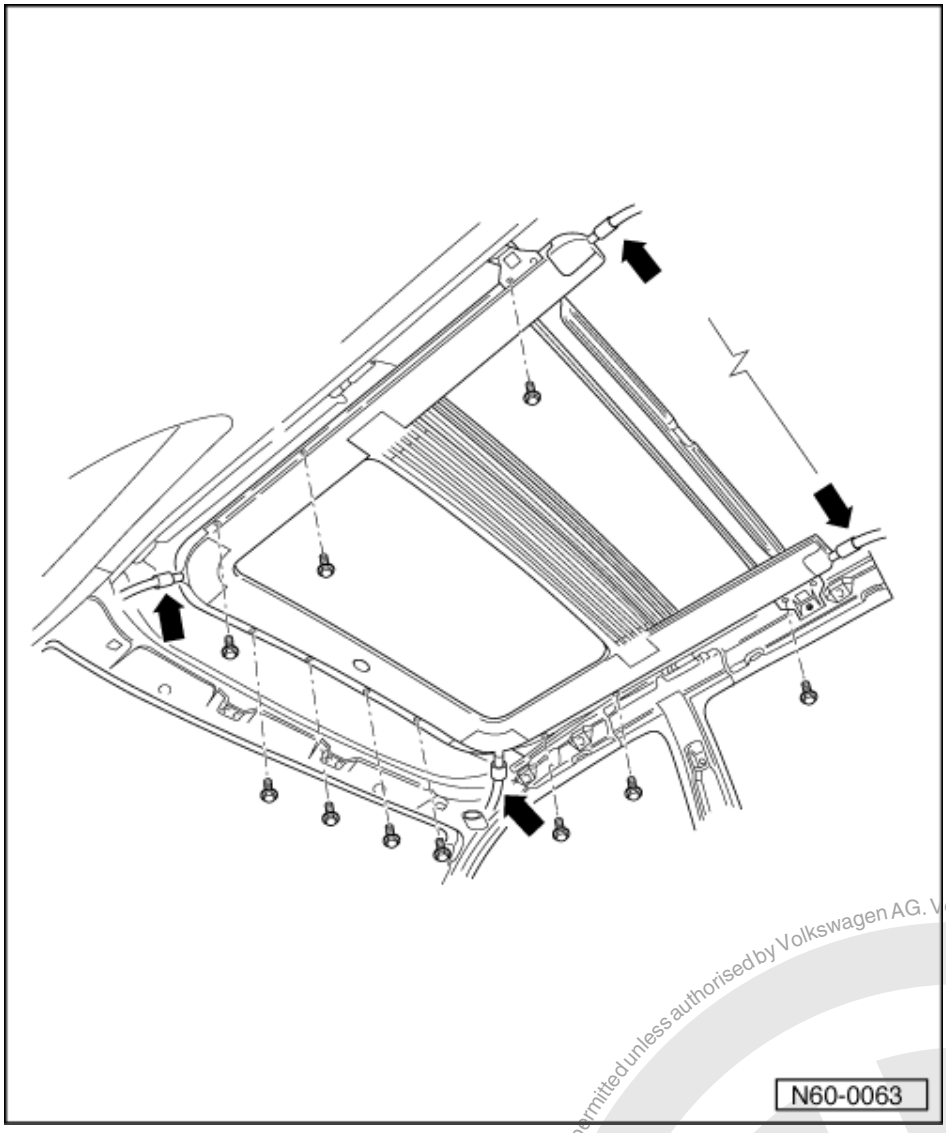

Removing

- Remove moulded headlining.

=> General body repairs, interior; Repair Group 70; Roof trim Roof trim

- Pull water drain hoses -arrows- off the carrier unit.
- For easier installation remove sliding/tilting sun roof glass panel => Page 83 .

Note:

The carrier unit can also be removed complete.

- Remove hexagon bolts and lift out carrier unit from vehicle with help of second mechanic.

Protected by copyright. Copying for private or commercial purposes, in part or in whole, is not permitted unless authorised by Volkswagen AG. Volkswagen AG does not guarantee or accept any liability with respect to the correctness of information in this document. Copyright by Volkswagen AG.
satelettronica

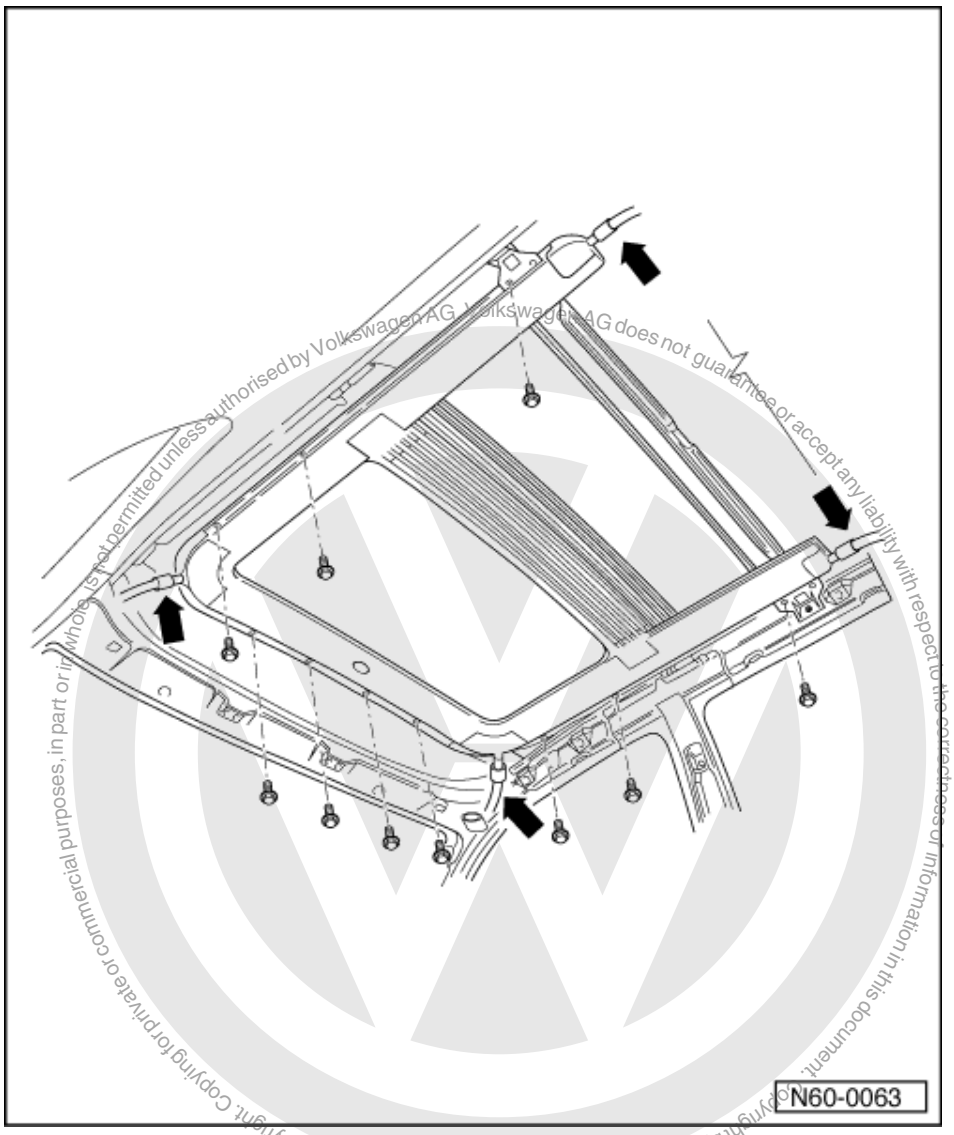

Protected by copyright. Copying for private or commercial purposes, in part or in whole, is not permitted unless authorised by Volkswagen AG. Volkswagen AG does not guarantee or accept any liability with respect to the correctness of information in this document. Copyright by Volkswagen AG.

satelettronica

Installing

- Place carrier unit on the rear mountings and swing upwards (the three fixing pins must locate in the mounting holes).
- Screw-on carrier unit (7.5 Nm).

1.11 - Cleaning water drain hoses (Polo Classic)

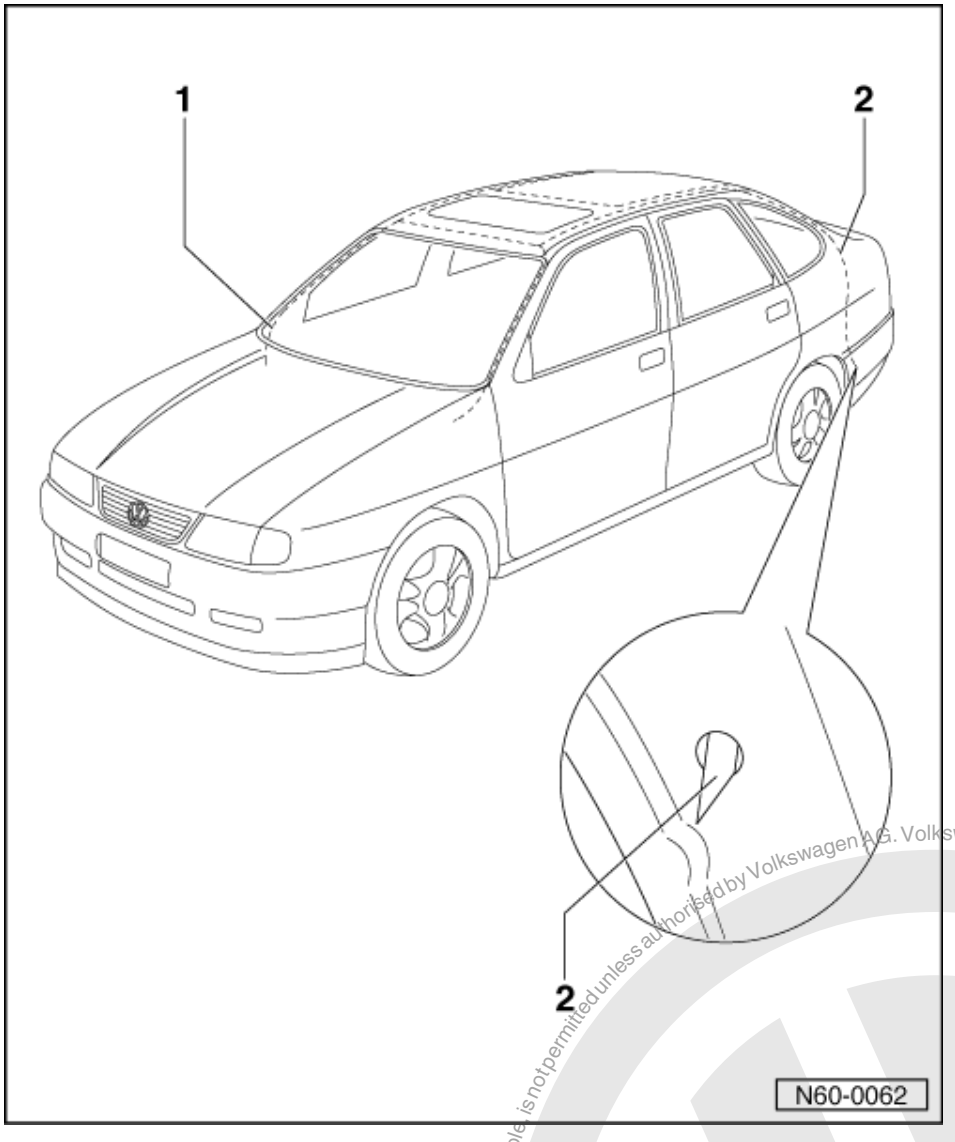

Front water drain hoses:

The front water drain hoses -1- are routed in or on the A pillars and end in the plenum chamber. Cleaning is performed from the sliding/tilting roof panel aperture.

Rear water drain hoses:

The rear water drain hoses -2- are routed in the D pillars and end behind the bumper cover. Cleaning is performed from the lower end of the hose. To do this, the bumper or luggage compartment trim must be removed.

Note:

For cleaning a locally manufactured tool made from a speedometer inner cable, approx. 2300 mm long is recommended.

Protected by copyright. Copying for private or commercial purposes, in part or in whole, is not permitted unless authorised by Volkswagen AG. Volkswagen AG does not guarantee or accept any liability with respect to the correctness of information in this document. Copyright by Volkswagen AG.
satelettronica

1.12 - Cleaning water drain hoses (Polo Estate)

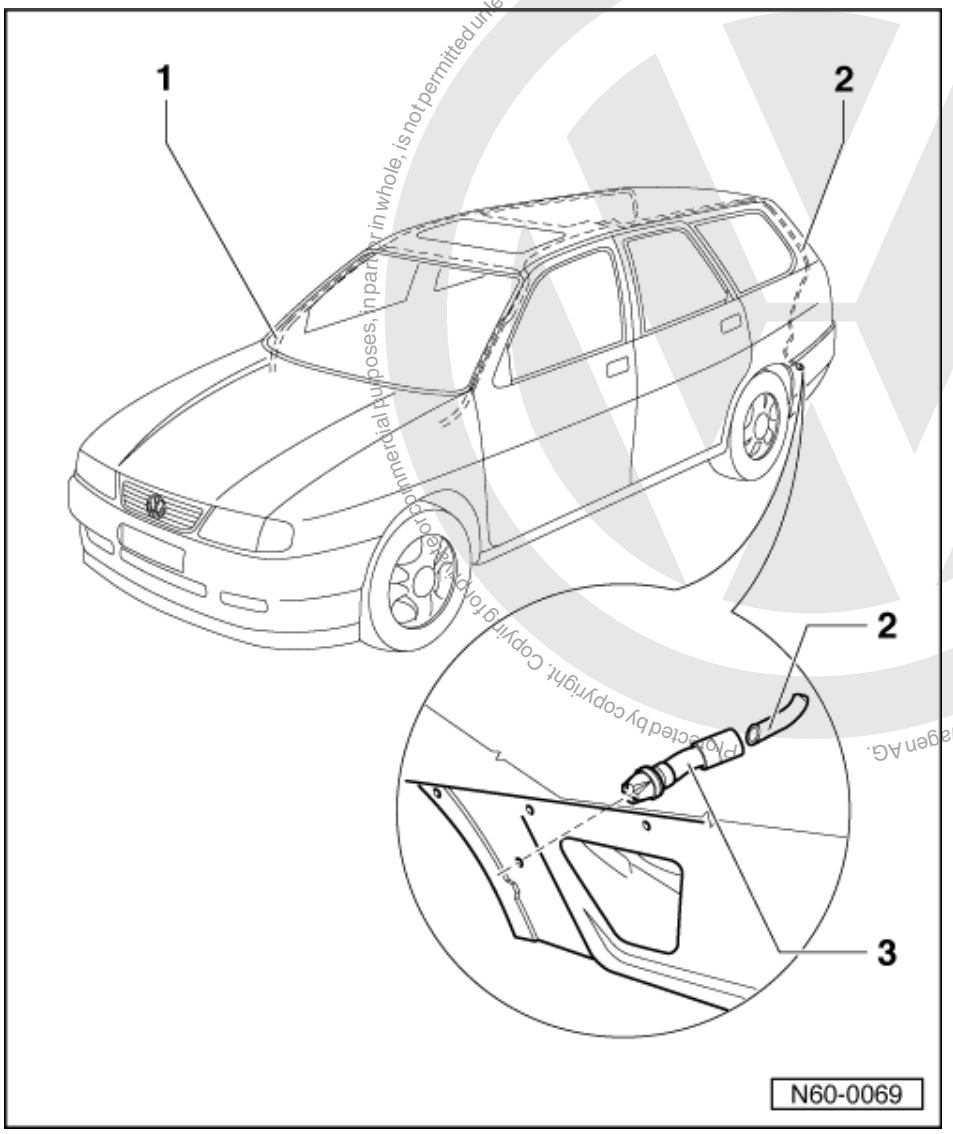

Protected by copyright. Copying for commercial purposes, in part or in whole, is not permitted unless authorised by Volkswagen AG. Volkswagen AG does not guarantee or accept any liability with respect to the correctness of information in this document. Copyright by Volkswagen AG.

satelettronica

Front water drain hoses:

The front water drain hoses -1- are routed in or on the A pillars and end in the plenum chamber. Cleaning is performed from the sliding/tilting roof panel aperture.

Rear water drain hoses:

The rear water drain hoses -2- are routed in the D pillars and end behind the bumper cover in the water drain valves -3-. Cleaning is performed from the lower end of the hose. To do this, the bumper or luggage compartment trim must be removed.

Note:

For cleaning a locally manufactured tool made from a speedometer inner cable, approx. 2300 mm long is recommended.

1.13 - Sliding/tilting sunroof with glass panel 10.99 >

1.14 - Function

With ignition switched on the sliding/tilting sunroof is opened and closed by turning the rotary switch.

After switching off the ignition the siding/tilting sunroof can be opened or closed until either the driver's or front passenger's door is opened.

On the rotary switch there are marks for preset sliding or tilting positions of the glass panel. Any other intermediate opening or tilting position can be selected by turning the switch in the appropriate direction.

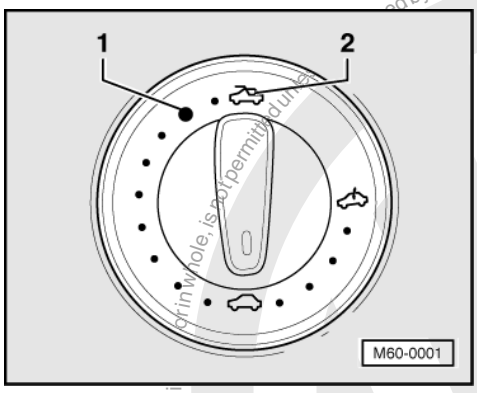

-> Opening the sliding/tilting sunroof to switch position -1-, the so called comfort position, prevents wind noises which to a great extent which would occur if opening fully with switch position -2-.

The sliding/tilting sunroof is equipped with a excess force limitation system (roll-back) for the sliding function. The roof will open automatically when contacting an obstruction during the closure sequence.

In addition there is an emergency closing function. If problems occur when closing the sliding roof, the emergency closing function can be initiated pressing the preselector switch when it is in the "sunroof closed" position.

The "roll back" function is disengaged when using the compulsory closure function.

The sliding/tilting sunroof drive is protected against overheating by a time limiter. The protective mechanism operates when the sunroof is operated continuously for approx. 2 minutes. It is functional again after a cooling-off phase.

satelettronica

1.15 - Sliding/tilting roof with glass panel - Assembly overview

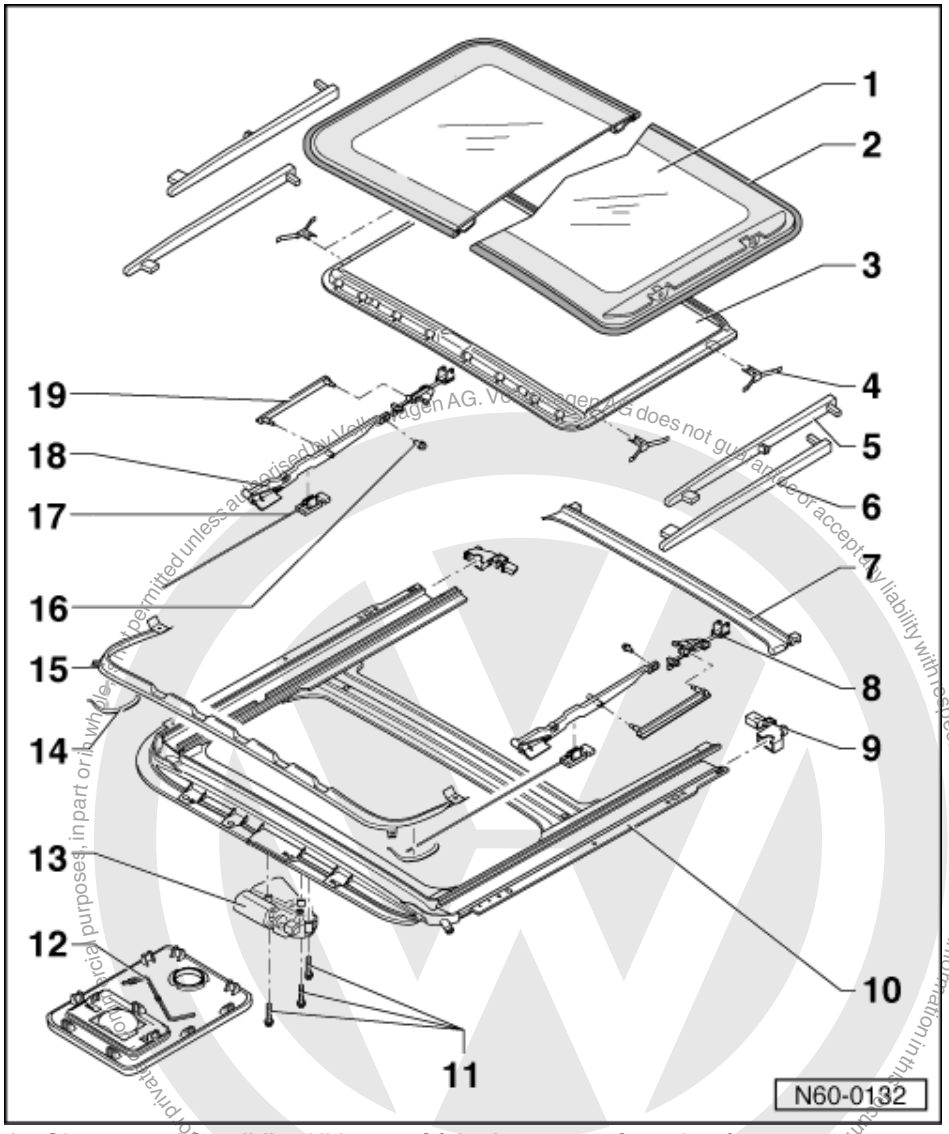

1 Glass panel for sliding/tilting roof (single pane safety glass)
- Removing sliding/tilting sunroof glass panel => Page 97
- Installing sliding/tilting sunroof glass panel => Page 97
- Adjusting sliding/tilting roof glass panel => Page 98

2 Panel seal
- Adjusting panel seal => Page 99
- Seal joint located centrally at rear
- Renewing panel seal => Page 100

satelettronica

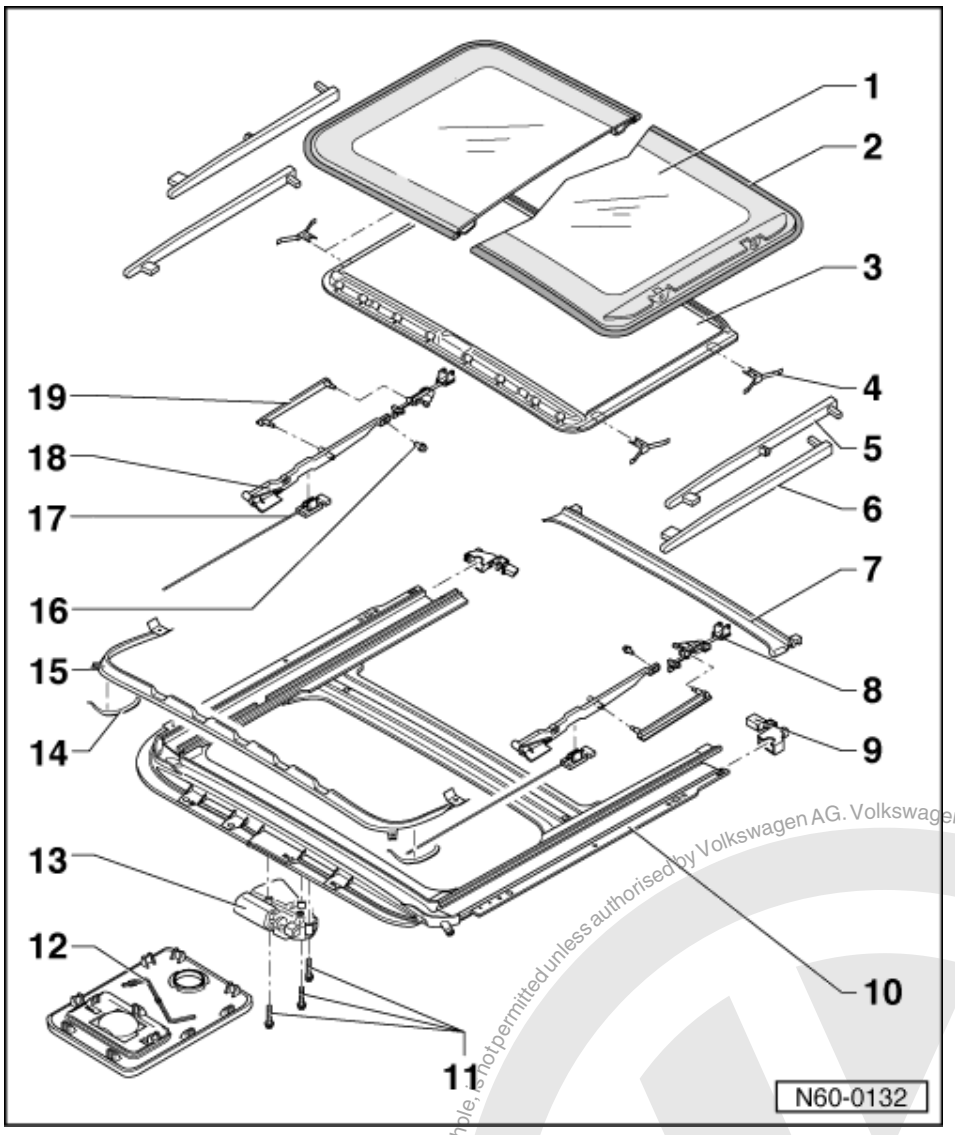

3 Sliding headlining
- Removing and installing sliding headlining =>Page 101

4 Slide

5 Upper trim
- Removing => Page 97

6 Lower trim
- Removing => Page 97

7 Water channel
- Removing => Page 108 , Removing guide rail and cable

8 Guide locking hook

9 End piece
- Use Butyl adhesive sealing cord AKL 450 005 05 to seal

Protected by copyright. Copying for private or commercial purposes, in part or in whole, is not permitted unless authorised by Volkswagen AG. Volkswagen AG does not guarantee or accept any liability with respect to the correctness of information in this document. Copyright by Volkswagen AG.
satelettronica

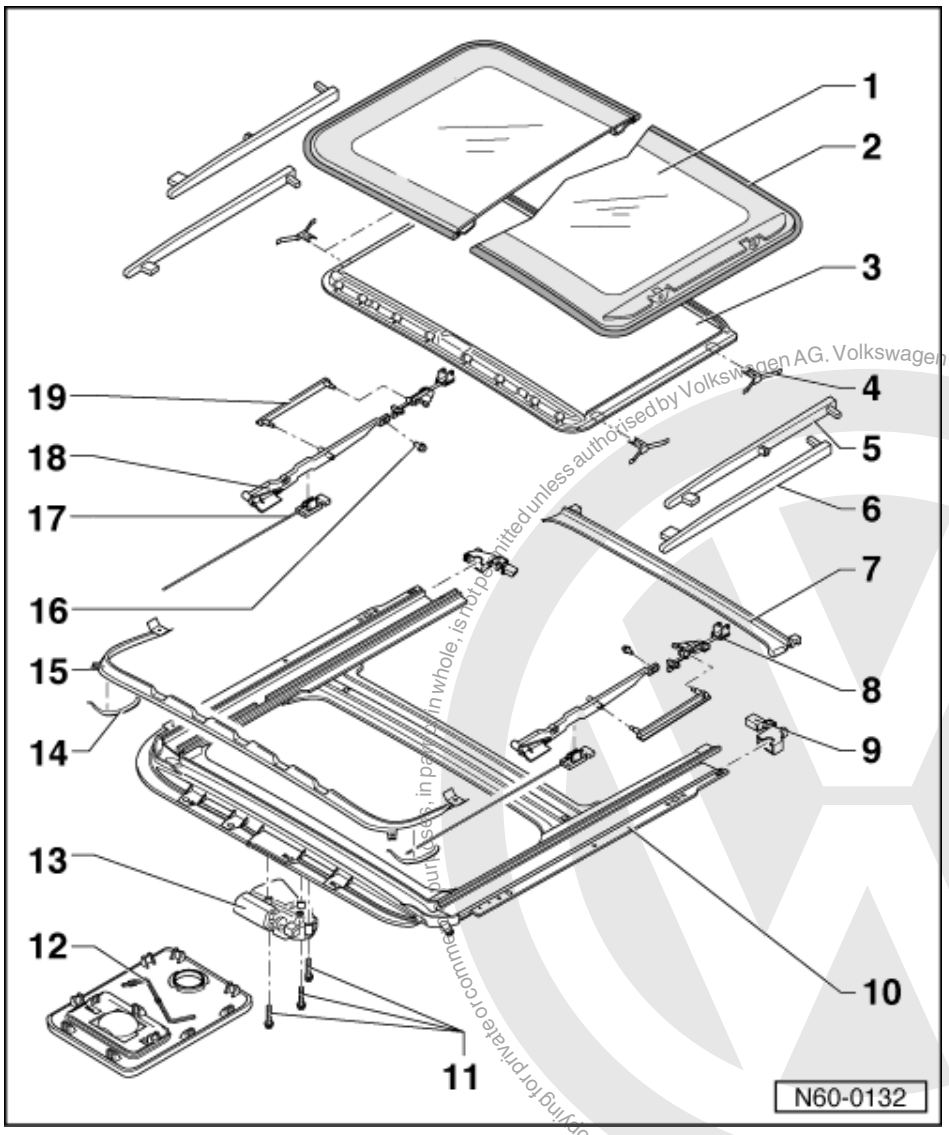

10 Carrier unit

- Removing and installing carrier unit =>Page 106
- If required, guide channels are to be greased with special grease G 000 450 02 only, otherwise correct operation cannot be guaranteed.

11 Bolt

- 3.5 Nm
- Must always be replaced

12 Hexagon key for emergency operation

- Clipped into cover for electric drive

13 Electric drive

- Removing => Page 103
- Adjusting drive (0 position) => Page 103

14 Spring

15 Wind deflector

- Removing => Page 101

satelettronica

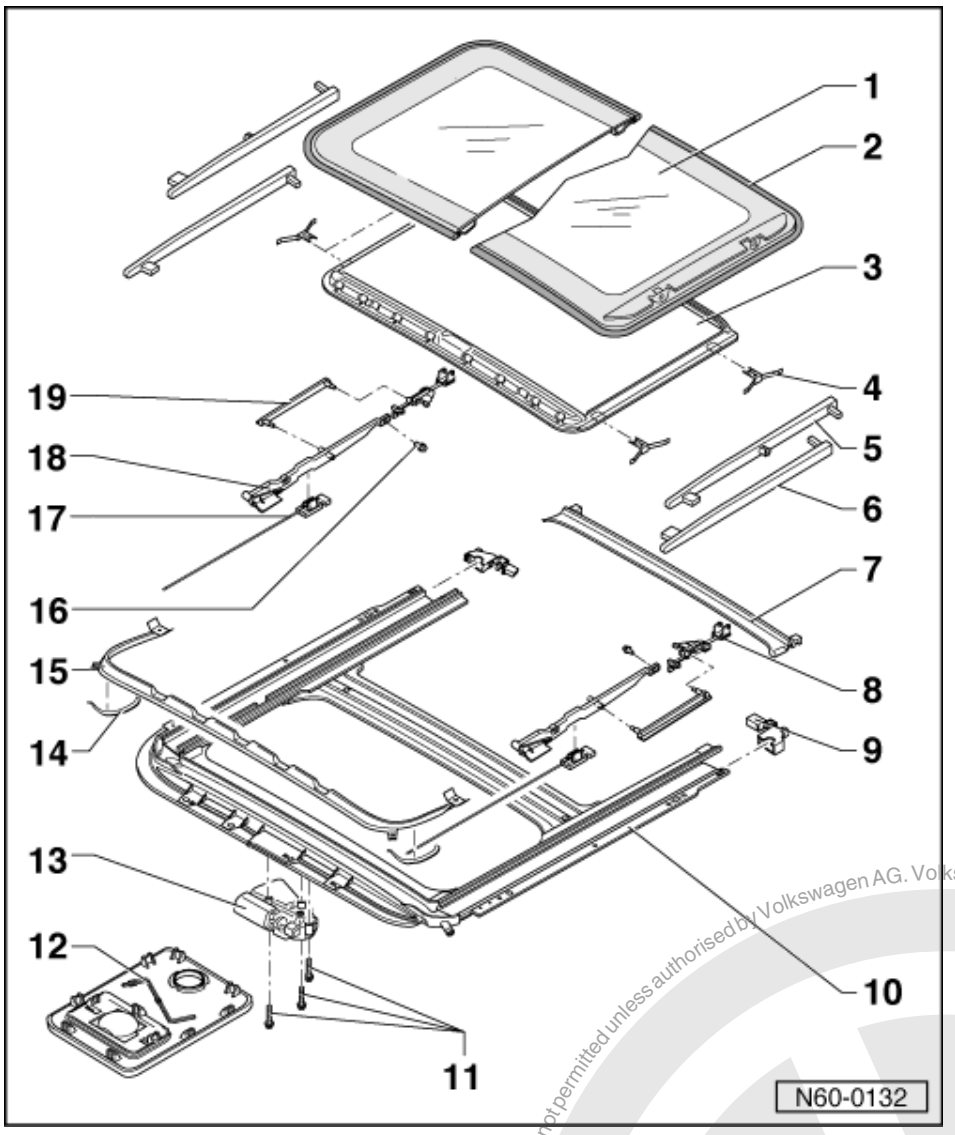

16 Torx screw
- Torx key T 25
- 4.5 Nm

17 Guide rail and cable
- Removing => Page 108

18 Coulisse guide rail
- Removing => Page 105

19 Spacer

Protected by copyright. Copying for private or commercial purposes, in part or in whole, is not permitted unless authorised by Volkswagen AG. Volkswagen AG does not guarantee or accept any liability with respect to the correctness of information in this document. Copyright by Volkswagen AG.
satelettronica

1.16 - Removing sliding/tilting sunroof glass panel

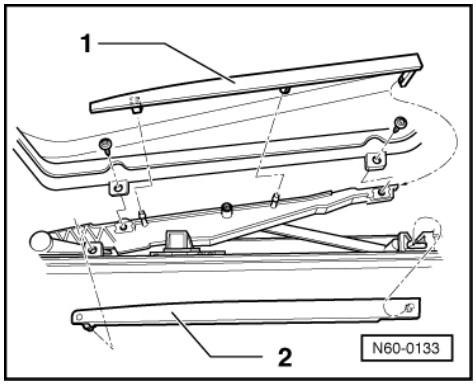

- Slide sun blind to rear.
- Tilt sliding/tilting roof open.
- -> Unclip lower trim -2- in forward area, inwards to centre of vehicle and unhook at rear.
- Unclip upper trim -1- at front and centre and unhook at rear.

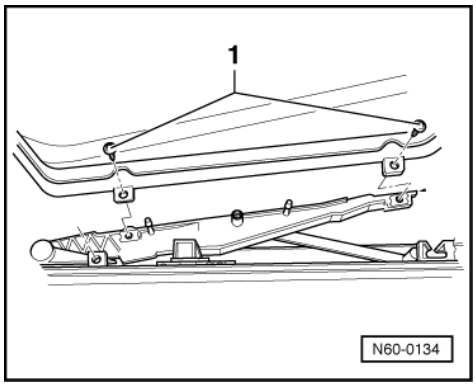

- -> Remove securing screws -1- (Torx bit T 25; 4.5 Nm).
- Take sliding/tilting roof panel out upwards.

Note:

The sliding/tilting sunroof must not moved to position "Open" when removed, because the water channel will not be compressed by the glass panel and can cant inside the roof.

1.17 - Installing sliding/tilting sunroof glass panel

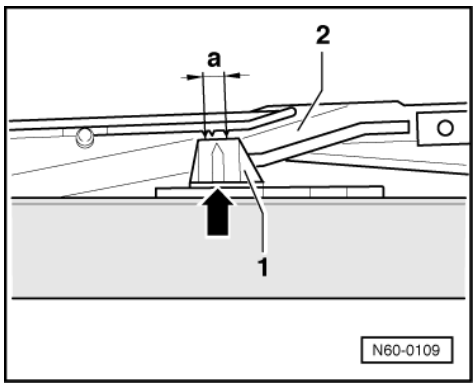

Panel must be installed in "0 position" (panel closed).

Protected by copyright. Copying for private or commercial purposes, in part or in whole, is not permitted unless authorised by Volkswagen AG. Volkswagen AG does not guarantee or accept any liability with respect to the correctness of information in this document. Copyright by Volkswagen AG.
satelettronica

"0" position:
-> The mark -arrow- on the rear of the guide upper section -1- must, on both sides, lie within the marks - dimension a- on the guide rail gate -2-.
The coulisse guide rail -2- must be located in the guide rails (cannot be moved by hand).
If this is not the case, adjust parallel running => Page 104 .

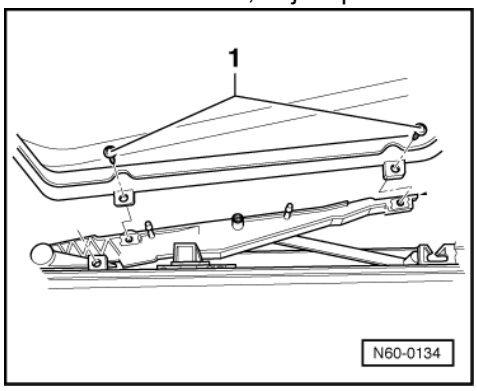

- -> Place sliding/tilting roof on from above and screw in securing screws (guide rail/panel).
- Tighten securing screws -1- lightly (Torx T 25).

Note:
After adjusting panel height =>Page 98 tighten securing screws (4.5 Nm).

1.18 - Adjusting sliding/tilting roof glass panel (height adjustment)

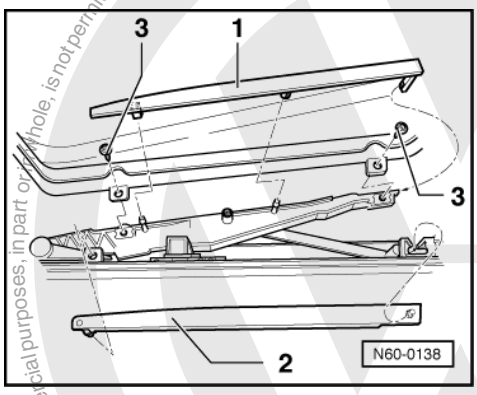

Sliding/tilting roof "0" position OK.
- Tilt sliding/tilting roof open.
- Slide sun blind to rear.
- -> Unclip lower trim -2- in forward area, inwards to centre of vehicle and unhook at rear.
- Unclip upper trim -1- at front and centre and unhook at rear.
- Remove securing screws -3- (Torx key T 25; 4.5 Nm).

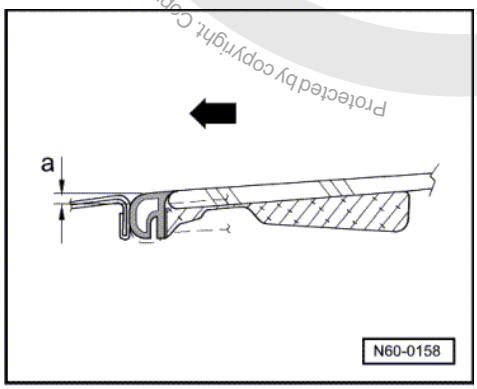

Protected by copyright. Copyright by Volkswagen AG.
Volkswagen AG. Volkswagen AG does not guarantee or accept any liability with respect to the correctness of information in this document.
satelettronica

- Run glass panel into "open" position.
- Run glass panel into "closed" position.
- Carry out height adjustment of glass panel at front and rear on both sides as follows:

-> Panel adjustment front:
a = 0...1 mm lower than roof level
Arrow = Direction of travel (forwards)

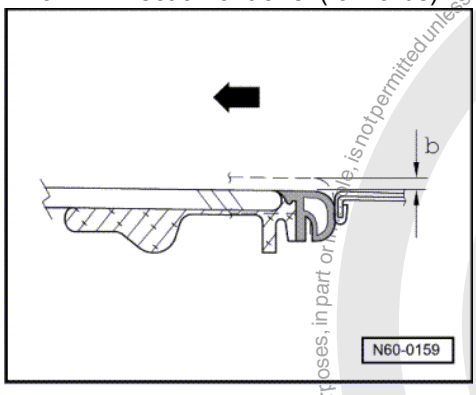

-> Panel adjustment rear:
b = 0...1 mm higher than roof level
Arrow = Direction of travel (forwards)
- Tighten screws for glass panel (4.5 Nm).

Always tighten left and right-hand glass panel sides symmetrically.
- Tilt sliding/tilting roof open.

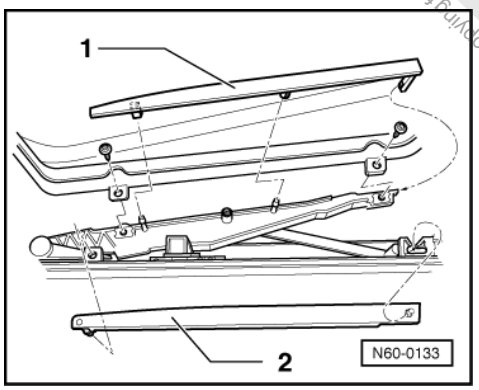

- -> Hook in upper trim -1- at rear and clip front and centre in.
- Hook in rear of lower trim -2- and clip front in.

1.19 - Adjusting panel seal

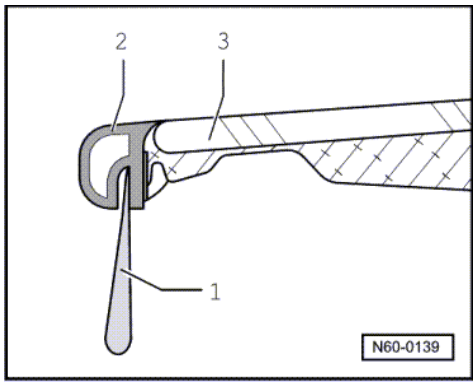

Protected by copyright. Copying for private or commercial purposes, in part or in whole, is not permitted unless authorised by Volkswagen AG. Volkswagen AG does not guarantee or accept any liability with respect to the correctness of information in this document. Copyright by Volkswagen AG.
satelettronica

- -> Check that the pre-tension between panel seal -2- and body is uniform all-round using a 0.3 mm thick strip of paper (a visiting card for example). It must be possible to pull the paper strip through between the panel seal and body under tension.
- If the pre-tension is insufficient, the panel seal can be pushed apart with a wedge -1-, or if the pre-tension is excessive pushed together. To adjust the panel seal the glass panel -3- must be removed.

1.20 - Renewing panel seal

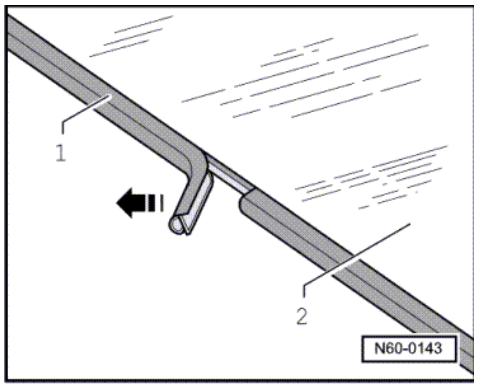

- Removing glass panel for sliding/tilting sunroof => Page 97 .
- -> Pull seal -1- off glass panel -2- in direction of arrow starting in centre of rear edge of glass panel.
- Remove all adhesive remains from edge of glass panel.

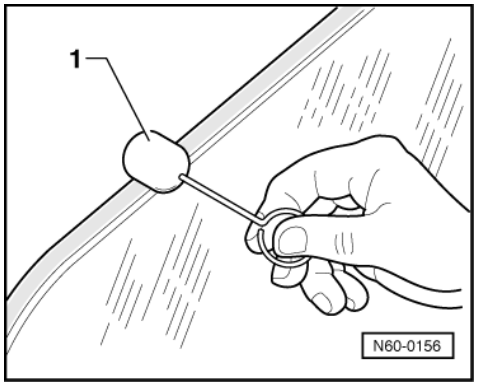

- -> Using applicator (D 009 500 25) -1- apply the primer included in the seal set =>current parts catalogue, around the complete bonding area of the glass panel.

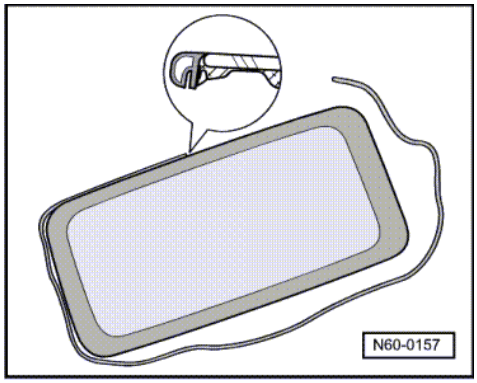

- -> Pull the protective foil gradually off the bonding surface of the new seal and bond the seal to the glass panel starting at rear in the centre of the glass panel.

Protected by copyright. Copying for private or commercial purposes, in part or in whole, is not permitted unless authorised by Volkswagen AG. Volkswagen AG does not guarantee or accept any liability with respect to the correctness of information in this document. Copyright by Volkswagen AG.
satelettronica

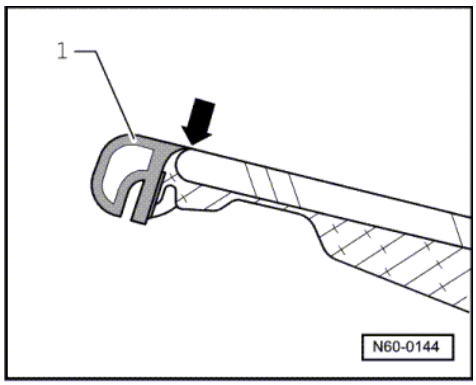

- -> At the top the new glass panel seal -1- must be flush with the edge of the glass panel (arrow).
- The panel seal must be shortened to correspond with the length of the outer edge of the panel.
- Then press the new seal firmly on using a rubber roller.
- Adjusting panel seal => Page 99 .
- Installing sliding/tilting sunroof glass panel => Page 97 .

1.21 - Removing wind deflector

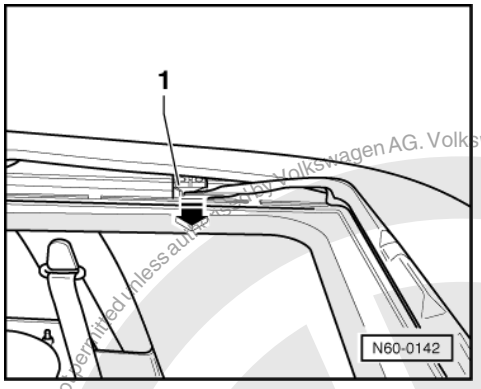

- Sliding/tilting roof completely open.
- -> Carefully lever wind deflector mounting -1- out of guide rail (on left and right) with a screwdriver.
- Take wind deflector out upwards.

1.22 - Removing and installing sliding headlining

Removing sliding headlining

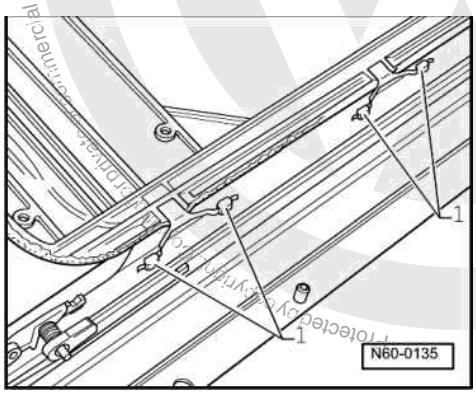

satelettronica
Copyright by Volkswagen AG. Volkswagen AG does not guarantee or accept any liability with respect to the correctness of information in this document. Copyright by Volkswagen AG.

Sliding/tilting roof glass panel removed and sliding/tilting roof unit in "closed position".
- Slide sliding headlining forwards.
- -> Press sliding headlining to one side. Lever slide -1- out of guide channel using a screwdriver (from front to rear).
- Take sliding headlining out upwards.

Installing sliding headlining

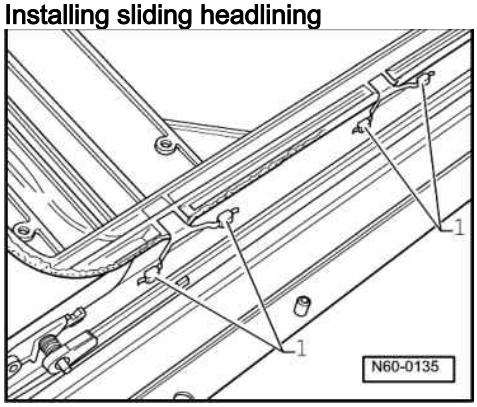

- -> Insert slide headlining into the roof cut-out. Insert slide for sliding headlining in guide channel (slide engaged in sliding headlining) and then insert slide in the guide channel on the opposite side.

1.23 - Removing sliding/tilting sunroof preselector switch

Notes:
- Before disconnecting the battery see the note concerning the coding in the instruction manual for the radio.
- After connecting battery, check vehicle equipment (radio, clock, electric windows) as per Workshop manual and/or Owner's manual.

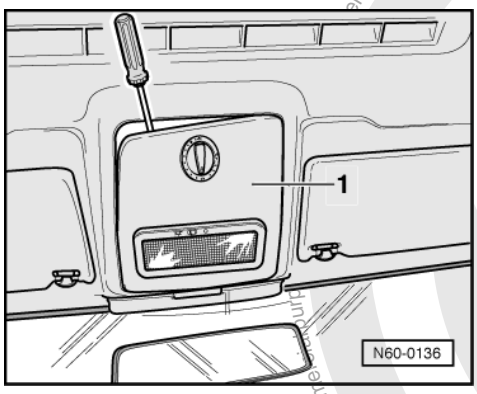

- Disconnect battery earth strap from battery.
- -> Unclip cover -1- for drive.
- Separate connector at the interior light.

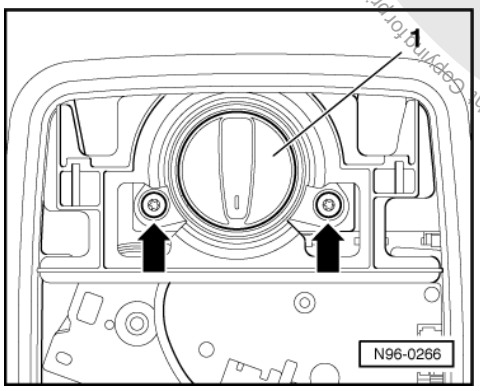

Protected by copyright. Copyright by Volkswagen AG.
Permitted use authorised by Volkswagen AG. Volkswagen AG does not guarantee or assume any liability with respect to the correctness of information in this document.
satelettronica

- -> Remove screws -arrows- and take sunroof control switch -1- out downwards.
- Pull off connector

1.24 - Removing drive for sliding/tilting sunroof

Note:

Remove and install drive for sliding/tilting roof only when roof is closed ("0" position).

- Remove sliding/tilting roof preselector switch => Page 102 .

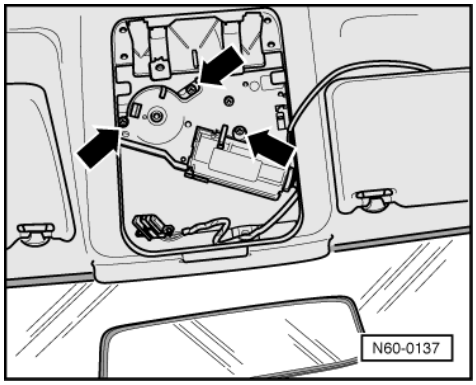

- -> Remove bolts -arrows- and pull out drive for sliding/tilting roof.
- Unclip and separate connector.

The bolts for the drive are micro encapsulated and must always be replaced (3.5 Nm).

1.25 - Adjusting drive for sliding/tilting sunroof ("0" position)

There may be a requirement to adjust the "0" position if the drive was removed when not in "0" position or the sliding/tilting sunroof was closed using the emergency key.

Drive removed but still connected electrically.

- Select "open roof" with preselection control rotary switch.
- Select "close roof" with preselection control rotary switch.
- Select "tilt roof" with preselection control rotary switch.
- Select "close roof" with preselection control rotary switch.
- Install drive in this position ("0" position) with sliding/tilting roof closed.

1.26 - Checking parallel running

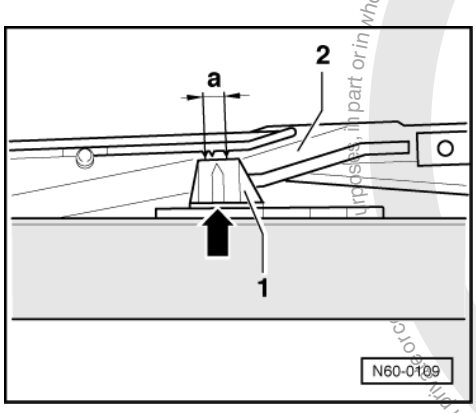

satelettronica
This document is protected by copyright. Copyright for this document is held by Volkswagen AG. Volkswagen AG does not guarantee or accept any liability with respect to the correctness of information in this document. Copyright by Volkswagen AG.

- Removing sliding/tilting sunroof trim => Page 97 .

Note:

The glass panel must be in the "zero" position (panel closed).

-> The mark -arrow- on the rear of the guide upper section -1- must, on both sides, lie within the marks - dimension a- on the guide rail gate -2-.

The coulisse guide rail -2- must be located in the guide rails (cannot be moved by hand).

1.27 - Adjusting parallel running

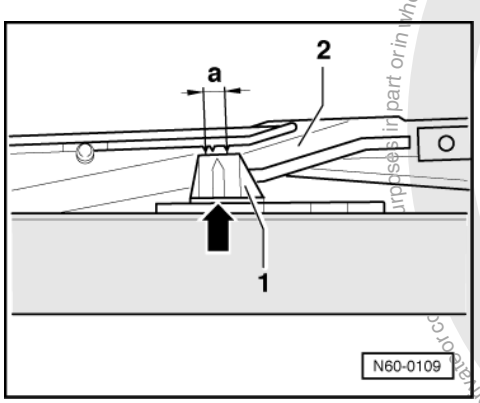

Note:

The parallel running adjustment can only be undertaken when the drive and glass panel are removed ("0" position).

- Removing sliding/tilting sunroof => Page 103 .

-> The mark -arrow- on the rear of the guide upper section -1- must, on both sides, lie within the marks - dimension a- on the guide rail gate -2-.

The coulisse guide rail -2- must be located in the guide rails (cannot be moved by hand).

- Slide guide upper part -1- from front to rear only centrally between the marks.

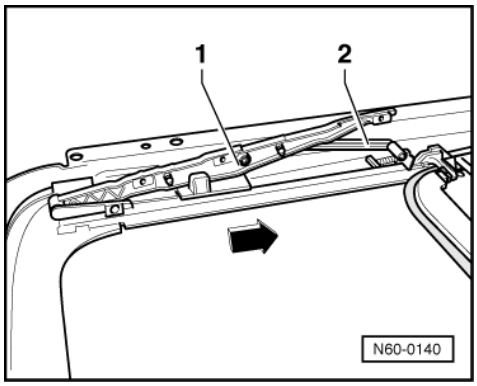

- Install drive in this position ("0" position).

Then check "0" position.

Protected by copyright. Copying for private or commercial purposes, in part or in whole, is not permitted unless authorised by Volkswagen AG. Volkswagen AG does not guarantee or accept any liability with respect to the correctness of information in this document. Copyright by Volkswagen AG.
satelettronica

1.28 - Removing coulisse guide

- Removing sliding/tilting sunroof glass panel => Page 97 .
- -> Unclip spacer -2- out to side.
- Slide coulisse guide -1- to stop in direction of arrow.

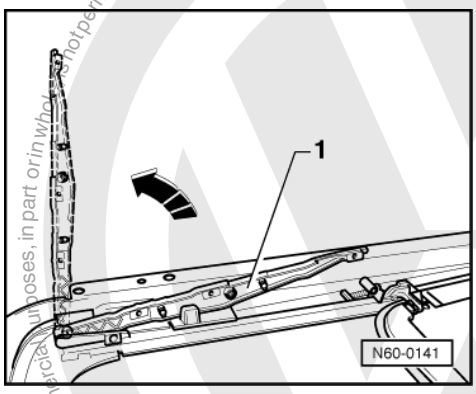

Note:

Ensure correct installation position when installing the spacer -2- (arrow on spacer).

- -> Swing coulisse guide -1- upwards and take out of guide.

Protected by copyright. Copyright by Volkswagen AG.
Volkswagen AG does not guarantee or accept any liability with respect to the correctness of information in this document. Copyright by Volkswagen AG.
Not permitted for commercial purposes, in part or in whole, without the authorisation of Volkswagen AG.
satelettronica

1.29 - Removing and installing carrier unit

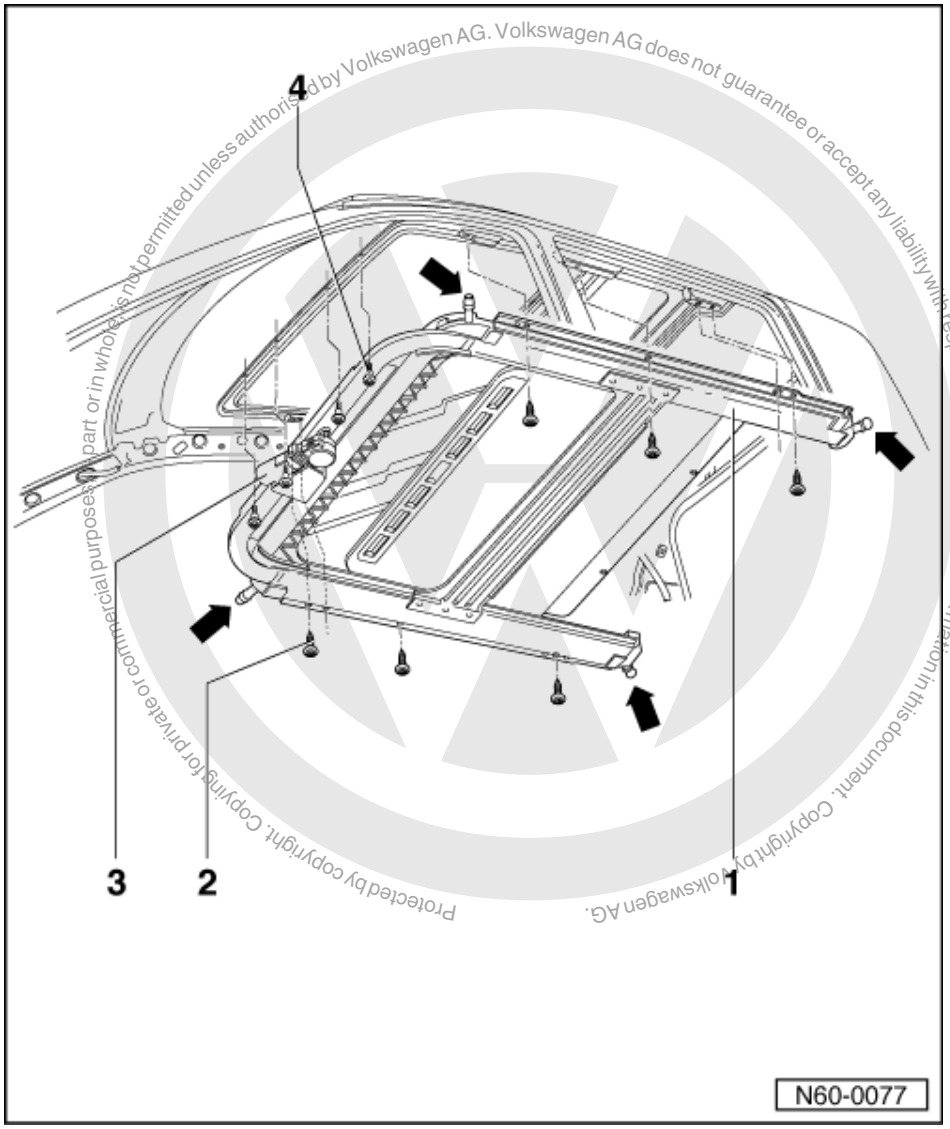

Protected by copyright. Copying for private or commercial purposes, in part or in whole, is not permitted unless authorised by Volkswagen AG. Volkswagen AG does not guarantee or accept any liability with respect to the correctness of information in this document. Copyright by Volkswagen AG.

satelettronica

Removing

- For easier installation remove sliding/tilting roof glass panel => Page 97 .
- Remove moulded headlining

=> General body repairs, interior; Repair group 70; Roof trim Roof trim

- Separate connector for drive -3-.
- Pull water drain hoses -arrows- off carrier unit -1-.
- Remove bolts -2- and -4- (with sleeves) and lift carrier unit out of vehicle with help of second mechanic.

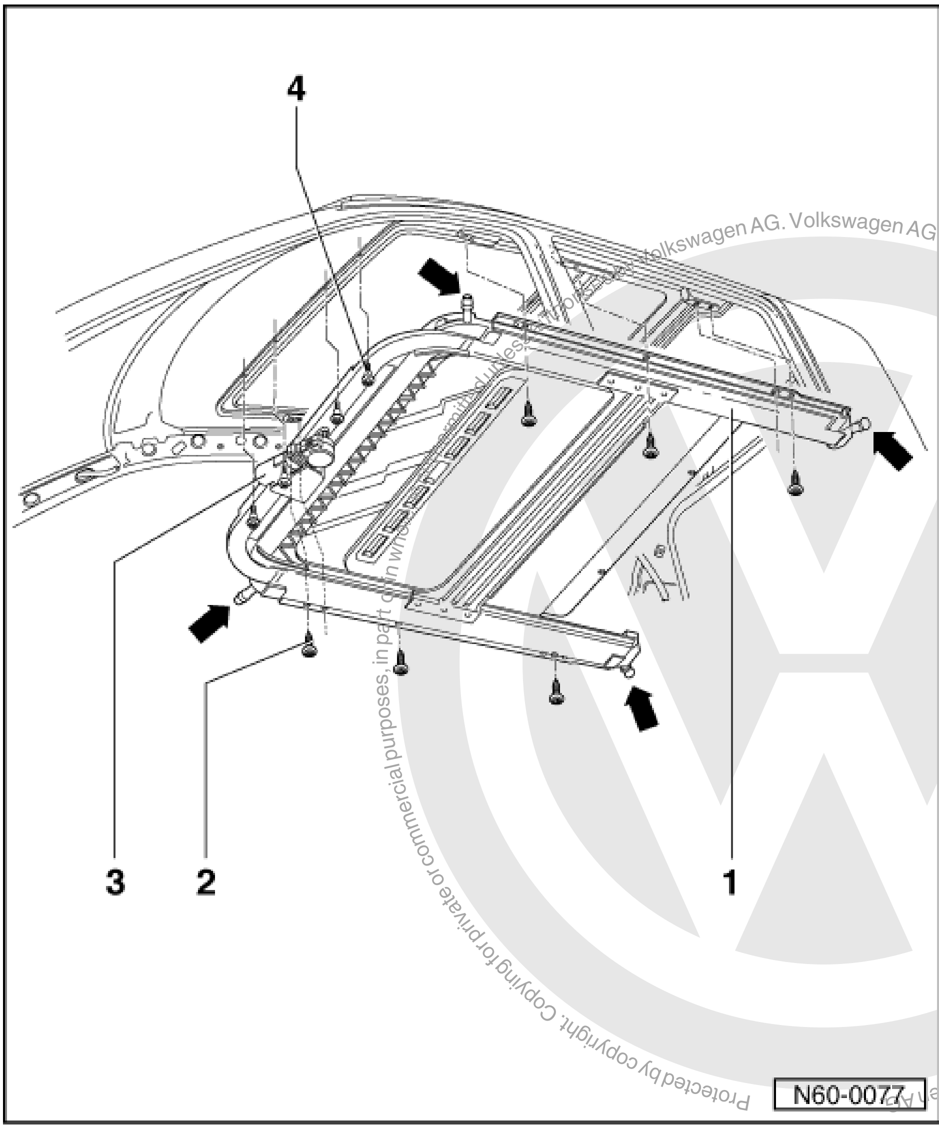

Protected by copyright. Copying for private or commercial purposes, in part or in whole, is not permitted unless authorised by Volkswagen AG. Volkswagen AG does not guarantee or accept any liability with respect to the correctness of information in this document. Copyright by Volkswagen AG.

satelettronica

Installing

- Place carrier unit -1- on the rear mountings and swing upwards (the three fixing pins must locate in the mounting holes).
- Insert screws -2- and -4-.
- Check electrical consumers electrical wiring and connections on roof and reinstate if necessary.
- Tighten carrier unit -1-, starting at sliding/tilting sunroof drive -3- on left and right-hand sides moving rearward (8 Nm).
- Fit connection for drive -3-.

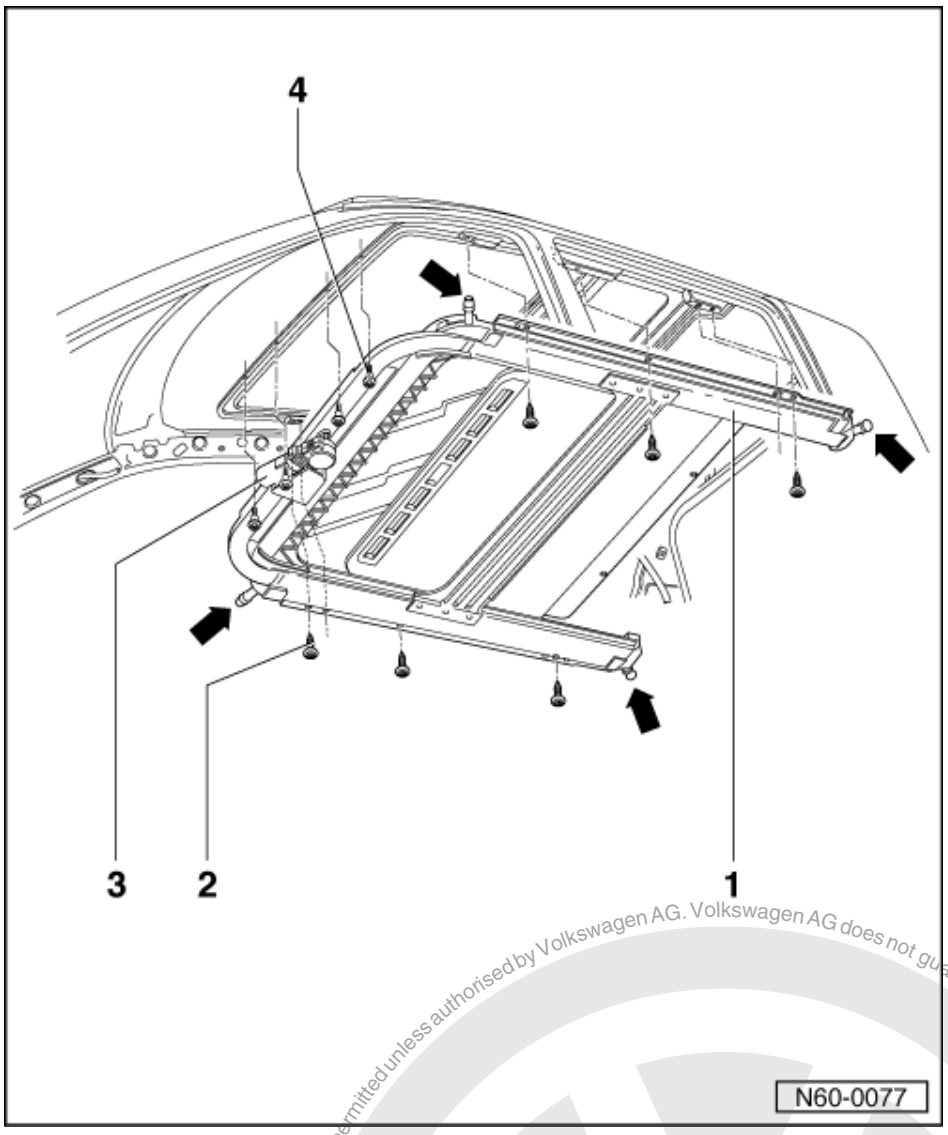

- Fit water drain hoses -arrows-.
- Installing moulded headlining

=> General body repairs, interior; Repair group 70; Roof trim Roof trim

- Installing sliding/tilting sunroof glass panel => Page 97 .

1.30 - Removing guide and cable

- Removing sliding/tilting sunroof glass panel => Page 97 .

Protected by copyright. Copying for private or commercial purposes, in part or in whole, is not permitted unless authorised by Volkswagen AG. Volkswagen AG does not guarantee or accept any liability with respect to the correctness of information in this document. Copyright by Volkswagen AG.
satelettronica

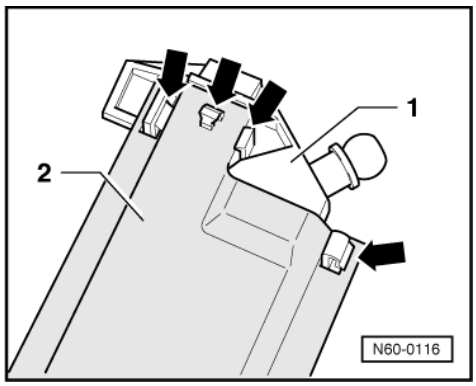

- Removing carrier unit => Page 106 .
- Removing drive for sliding/tilting sunroof => Page 103 .
- -> Unclip end cap -1- -arrows- from guide rail -2- and then pull off.

Note:

When installing, seal end piece -1- to guide rail using Butyl adhesive sealing cord AKL 450 005 05.

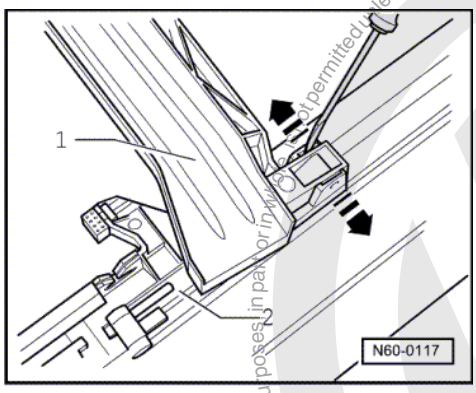

- -> Unclip water channel -1- from locking lug guide -2- on both sides carefully with a screwdriver and take off.

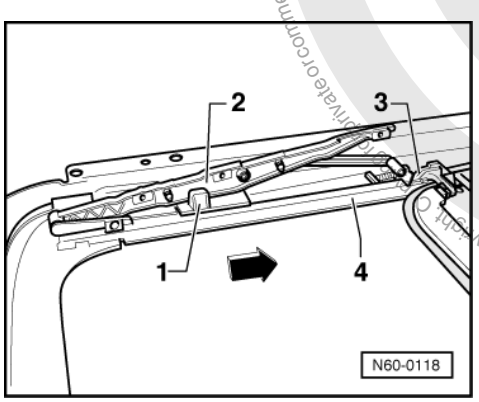

- -> Slide guide and cable -1- in guide rail -4- in direction of arrow until the locking lug guide -3- is released.
- Pull guide and cable -1-, locking lug guide -3- and coulisse guide -2- out of guide rail -4-.

Installation instructions:

- Always renew guides and cable as a pair.
- Lubricate guide channels with special grease G 000 450 02.
- Installing carrier unit =>Page 106 .
- Adjusting parallel running =>Page 104 .
- Installing glass panel for sliding/tilting roof=>Page 97 .

Protected by copyright. Copyright by Volkswagen AG.
Copy for private or commercial purposes, in part or in whole, is not permitted unless authorised by Volkswagen AG. Volkswagen AG does not guarantee or accept any liability with respect to the correctness of information in this document.
satelettronica

1.31 - Cleaning water drain hoses (Polo Classic)

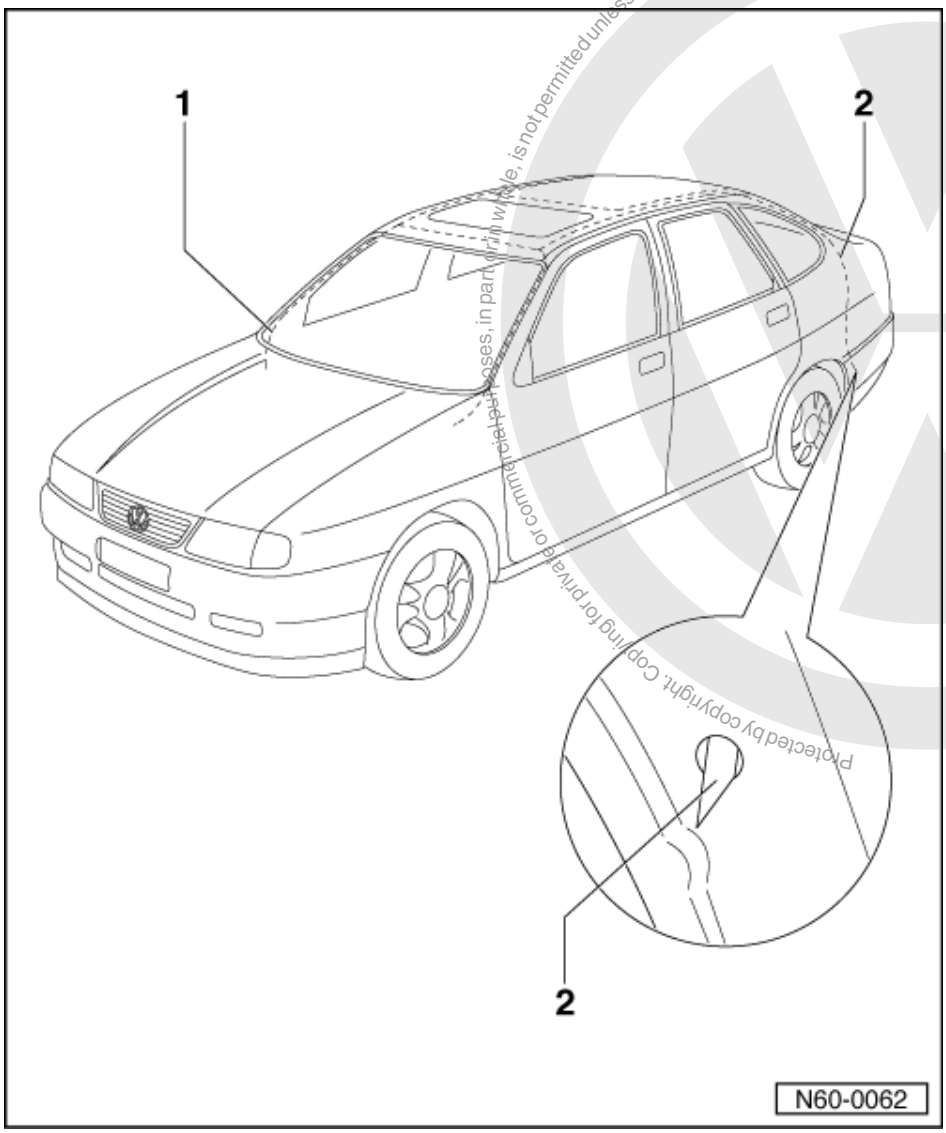

Protected by copyright. Copying for private or commercial purposes, in part or in whole, is not permitted unless authorised by Volkswagen AG. Volkswagen AG does not guarantee or accept any liability with respect to the correctness of information in this document. Copyright by Volkswagen AG.
satelettronica

Front water drain hoses:

The front water drain hoses -1- are routed in or on the A pillars and end in the plenum chamber. Cleaning is performed from the sliding/tilting roof panel aperture.

Rear water drain hoses:

The rear water drain hoses -2- are routed in the D pillars and end behind the bumper cover. Cleaning is performed from the lower end of the hose. To do this, the bumper or luggage compartment trim must be removed.

Note:

For cleaning a locally manufactured tool made from a speedometer inner cable, approx. 2300 mm long is recommended.

1.32 - Cleaning water drain hoses (Polo Estate)

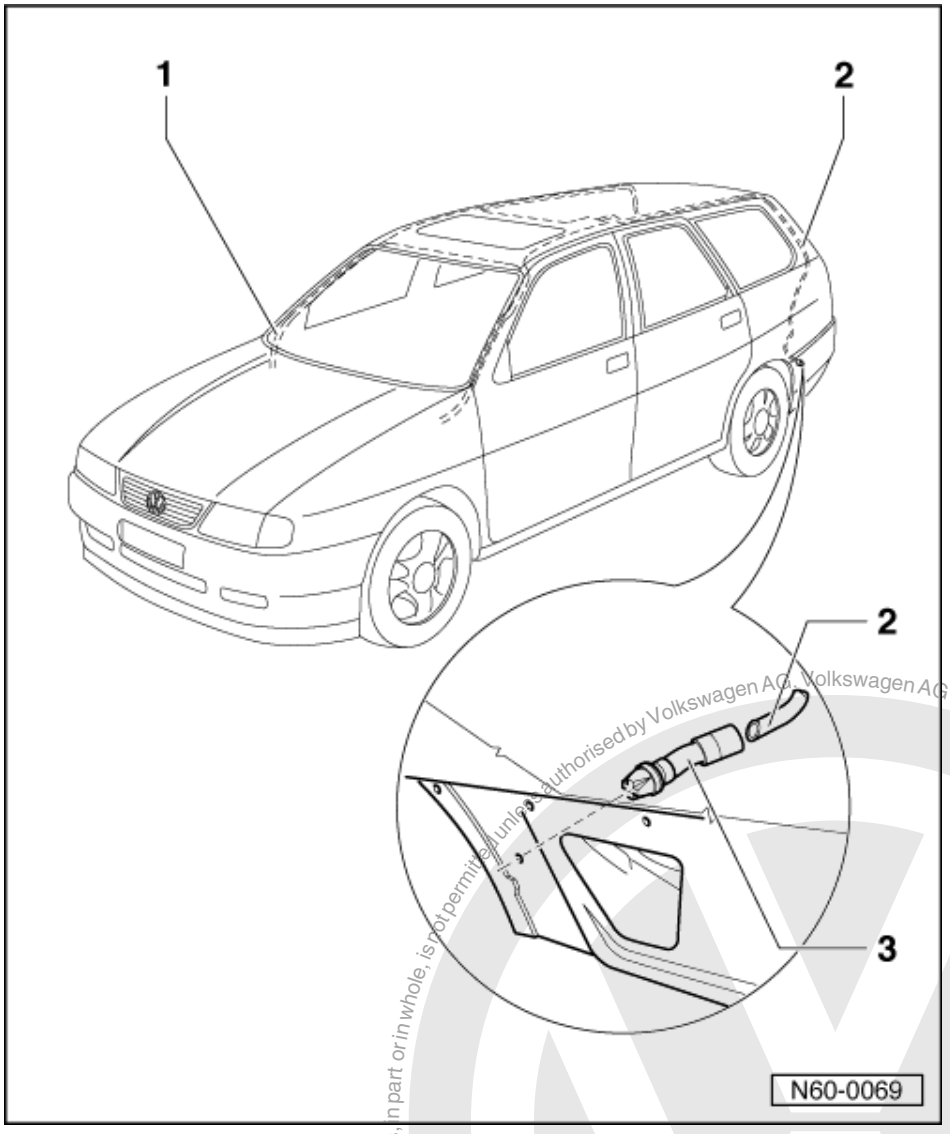

Front water drain hoses:

The front water drain hoses -1- are routed in or on the A pillars and end in the plenum chamber. Cleaning is performed from the sliding/tilting roof panel aperture.

Rear water drain hoses:

The rear water drain hoses -2- are routed in the D pillars and end behind the bumper cover in the water drain valves -3-. Cleaning is performed from the lower end of the hose. To do this, the bumper or luggage compartment trim must be removed.

Note:

For cleaning a locally manufactured tool made from a speedometer inner cable, approx. 2300 mm long is recommended.

Protected by copyright. Copying for private or commercial purposes, in part or in whole, is not permitted unless authorised by Volkswagen AG. Volkswagen AG does not guarantee or accept any liability with respect to the correctness of information in this document. Copyright by Volkswagen AG.
satelettronica

63 - Bumpers

1 - Front bumper

1.1 - Front bumper

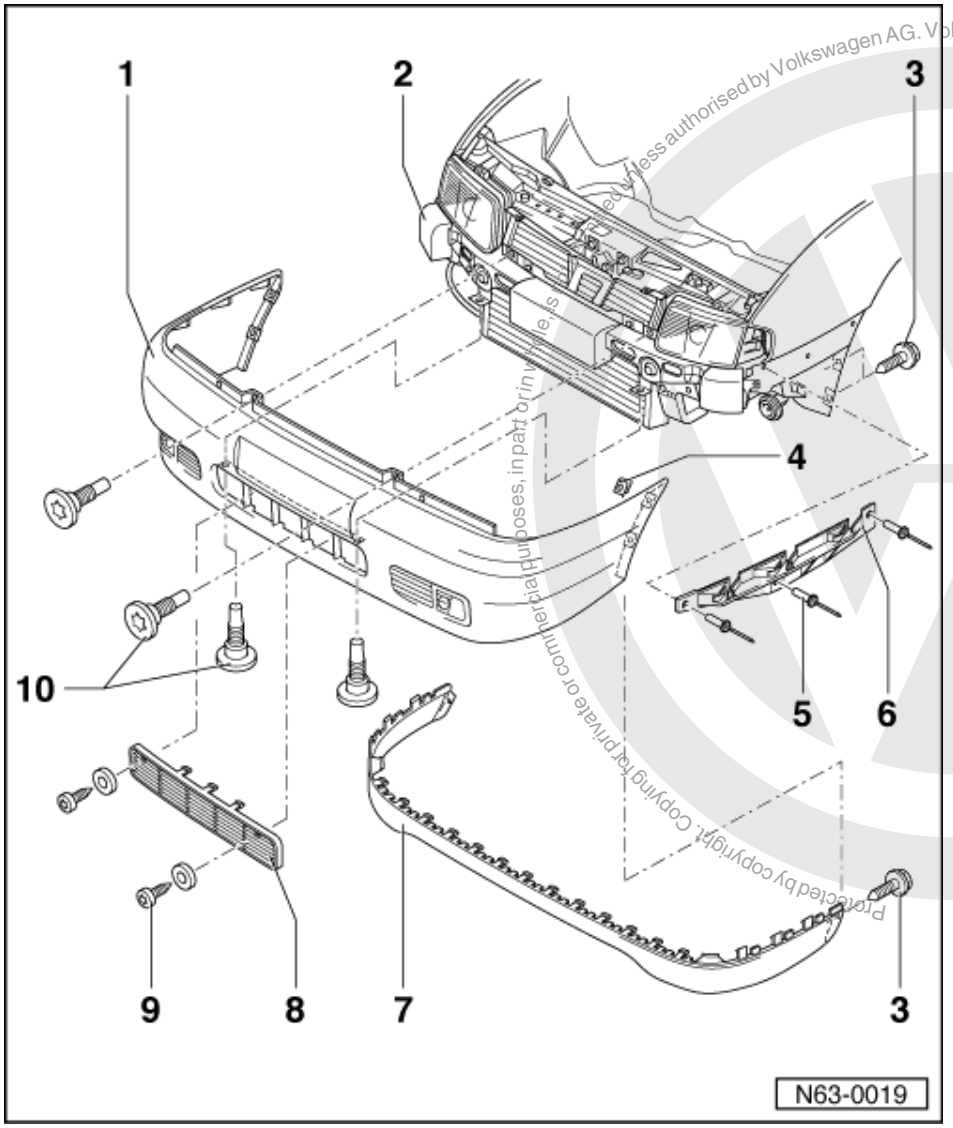

Protected by copyright. Copying for private or commercial purposes, in part or in whole, is not permitted unless authorised by Volkswagen AG. Volkswagen AG does not guarantee or accept any liability with respect to the correctness of information in this document. Copyright by Volkswagen AG.
satelettronica

1.2 - Assembly overview

1 Cover plate
- ◆ Removing:
- Remove cross-head screws - 3 -.
- Release or remove air guide parts => Page 171 .
- Remove air grille - 8 -.
- Remove radiator grille with trim frame =>Page 165 .
- Remove Torx screws - 10 -
- Separate electrical connections if necessary.
- Pull bumper out of the side guides - 6 -.

2 Deformation element

- Bonded
- Bond with universal adhesive D 001 200 if required

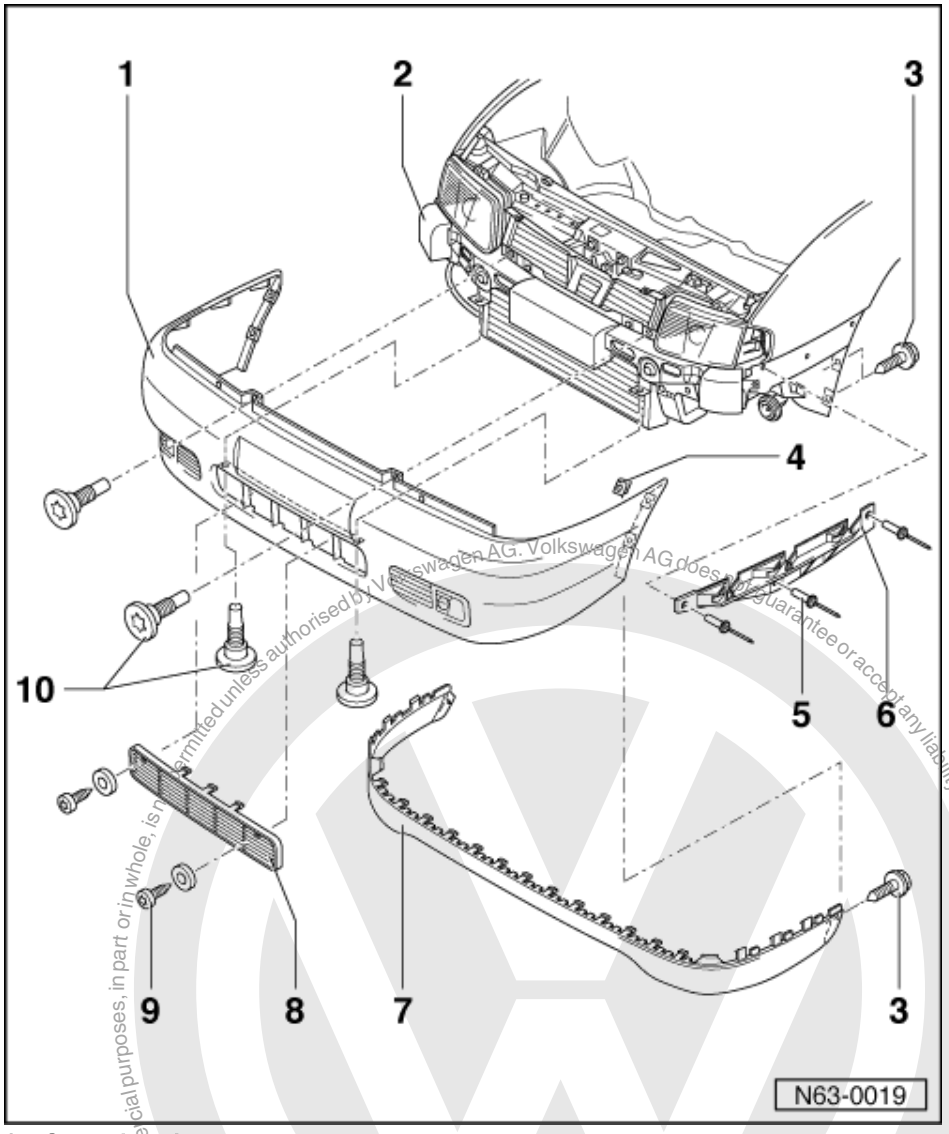

3 Cross-head screw
- Used to secure wheel housing liner

4 Plate nut

5 Pop rivet
- Install with pliers V.A.G 1663

6 Guide
- Secured with pop rivets - 5 -

7 Spoiler
- Clipped into cover
- Need not be removed when removing the bumper

8 Air grille
- Removing => Fig. 114

9 Cross-head screw

10 Torx screw T 30
- 6 Nm

Protected by copyright. Copyright by Volkswagen AG.
Volkswagen AG does not guarantee or accept any liability with respect to the correctness of information in this document. Copyright by Volkswagen AG.
Reproduction, in whole or in part, for private or commercial purposes, is not permitted unless authorised by Volkswagen AG.
satelettronica

Removing air grille

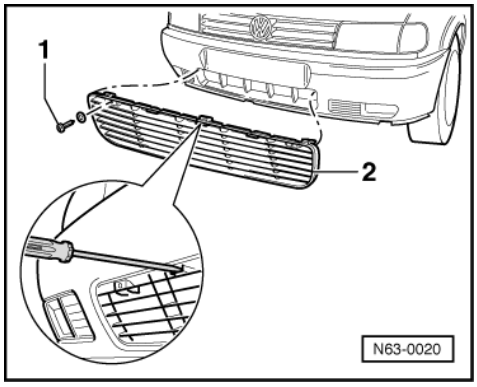

- -> Unscrew cross-head screws -1-.
- Release air grille locking lugs with a screwdriver and pull air grille -2- upwards out of bumper opening.

Protected by copyright. Copying for private or commercial purposes, in part or in whole, is not permitted unless authorised by Volkswagen AG. Volkswagen AG does not guarantee or accept any liability with respect to the correctness of information in this document. Copyright by Volkswagen AG.
satelettronica

2 - Rear bumper

2.1 - Rear bumper

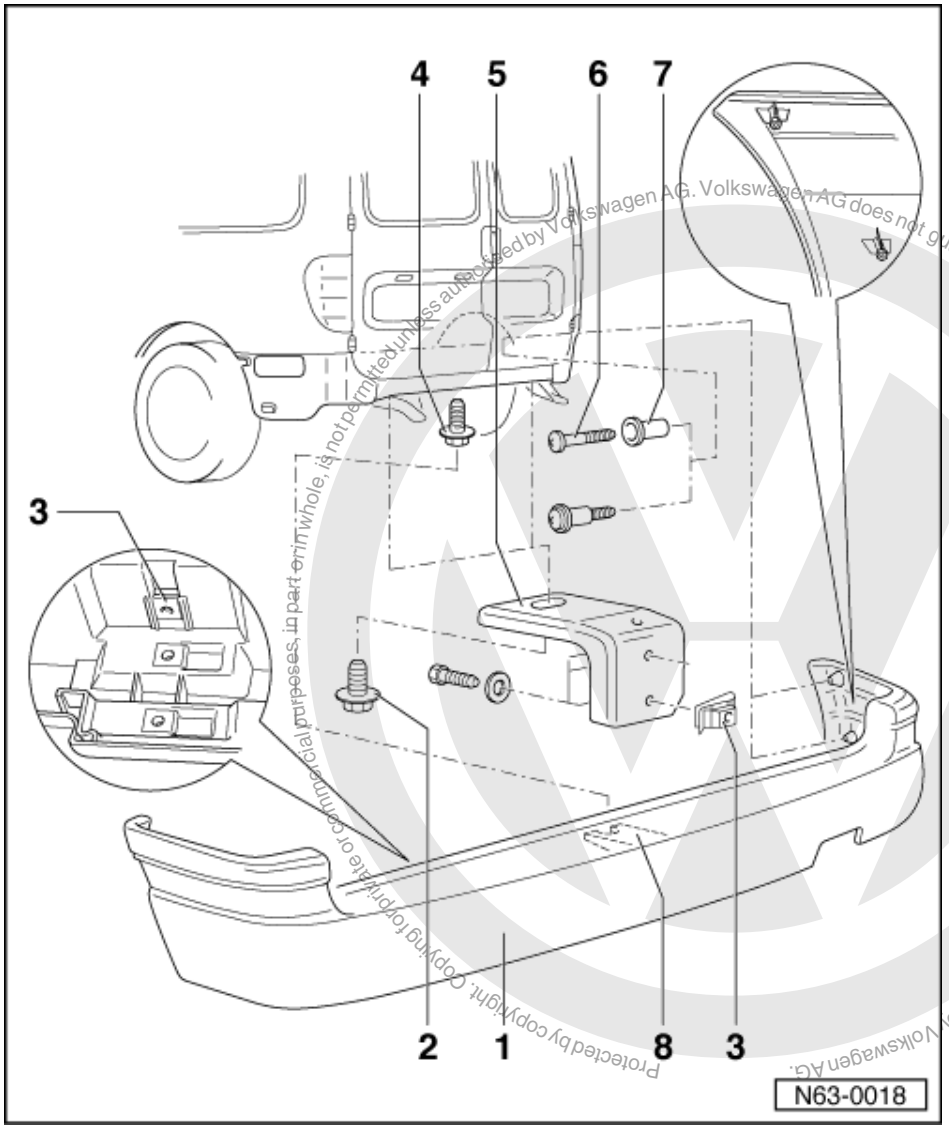

2.2 - Assembly overview (Caddy)

1 Cover plate
- ◆ Removing:
- Remove cross-head screws - 6 - and take off together with guide sleeves - 7 -.
- Loosen hexagon bolt - 4 - and remove hexagon bolts - 2 -
- Pull cover with brackets - 5 - off vehicle to rear.

2 Hexagon bolt

3 Plate nut
- ◆ Fit onto bumper

4 Hexagon head bolt

Protected by copyright. Copying for private or commercial purposes, in part or in whole, is not permitted unless authorised by Volkswagen AG. Volkswagen AG does not guarantee or accept any liability with respect to the correctness of information in this document. Copyright by Volkswagen AG.
satelettronica

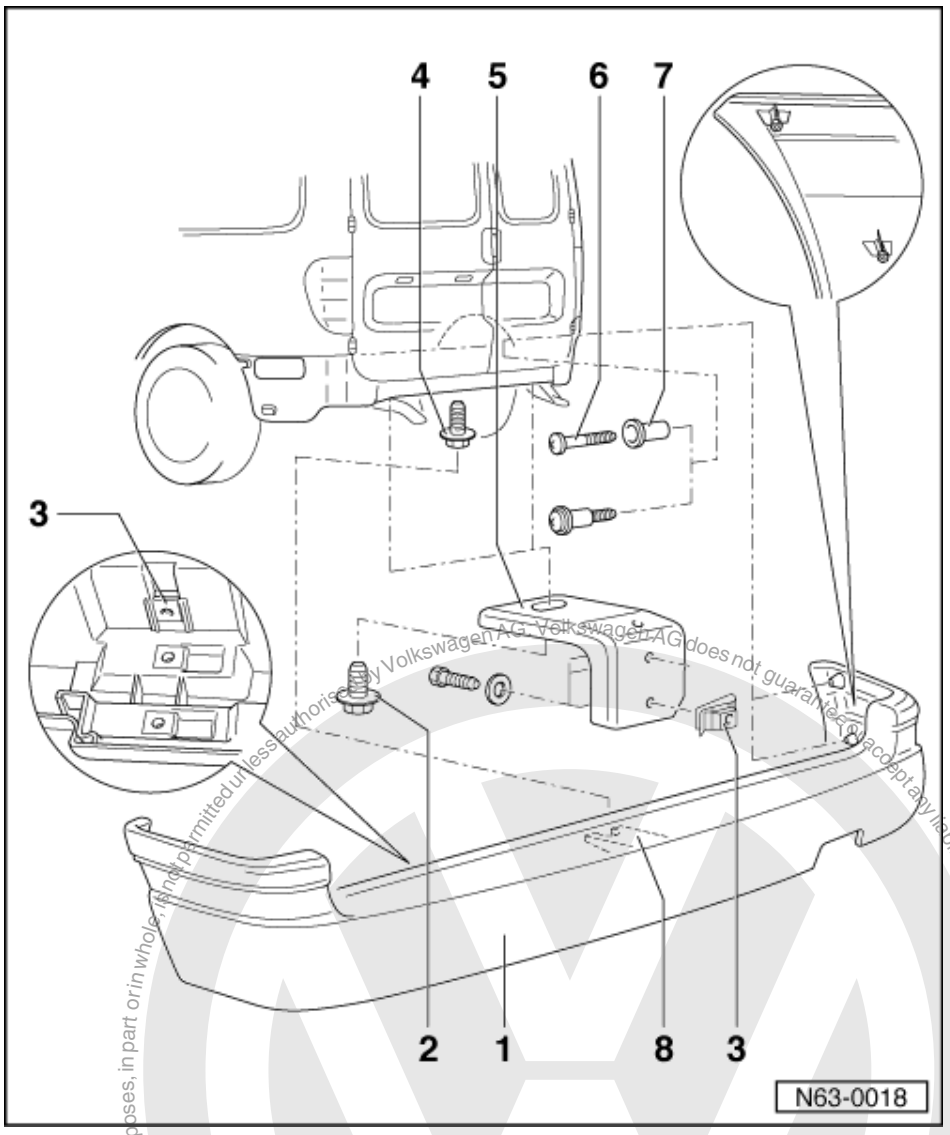

5 Bracket
6 Cross-head screw
7 Guide sleeve
8 Bracket
- Part of cover

Protected by copyright. Copying for private or commercial purposes, in part or in whole, is not permitted unless authorised by Volkswagen AG. Volkswagen AG does not guarantee or accept any liability with respect to the correctness of information in this document. Copyright by Volkswagen AG.
satelettronica

2.3 - Assembly overview (Polo Classic)

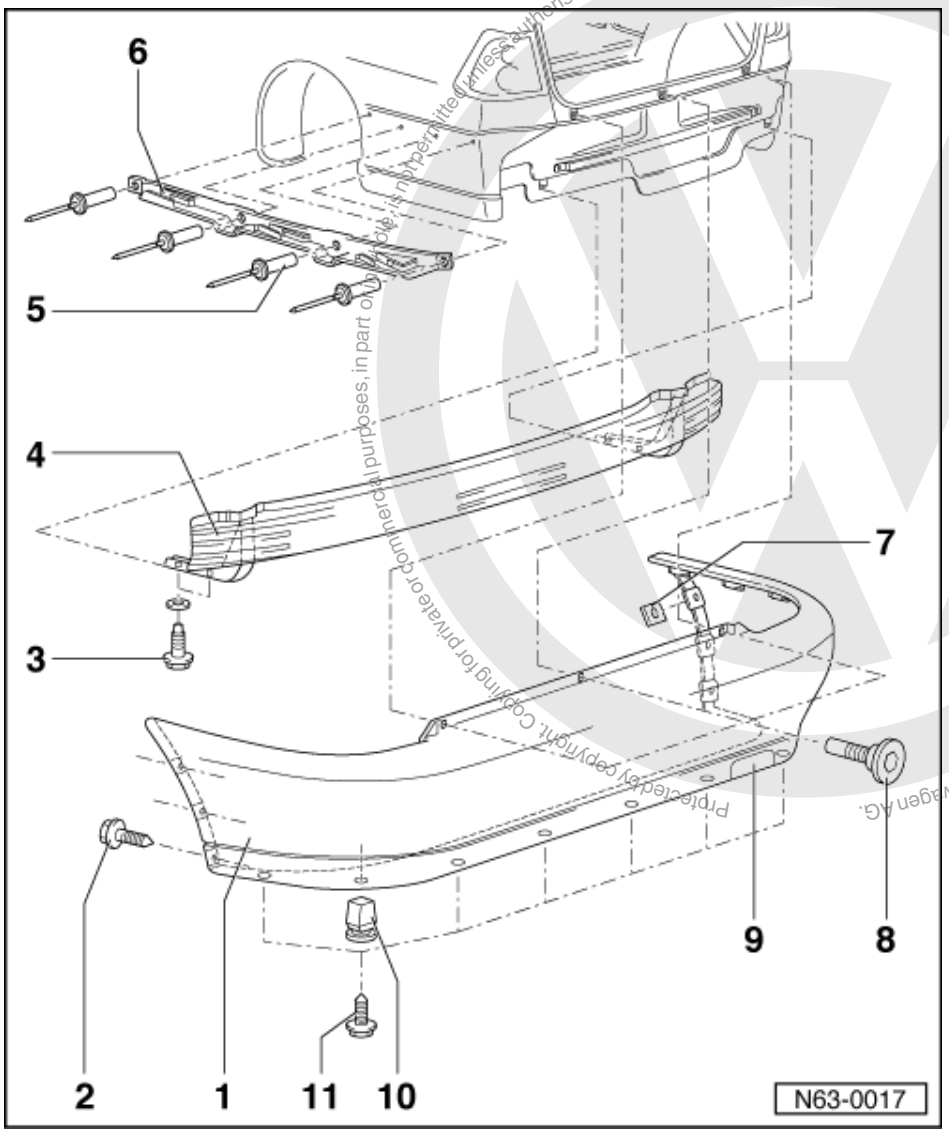

1 Cover plate
- Removing:
- Remove hexagon head bolts - 11 -.
- Remove combi-bolts - 2 -.
- Open tailgate/boot lid.
- Remove Torx screws - 8 -.
- Pull cover off to rear out of side guides - 5 -.

2 Combi bolt
- Used to secure wheel housing liner

3 Hexagon bolt
- 70 Nm

Protected by copyright. Copying for private or commercial purposes, in part or in whole, is not permitted unless authorised by Volkswagen AG. Volkswagen AG does not guarantee or accept any liability with respect to the correctness of information in this document. Copyright by Volkswagen AG.
satelettronica

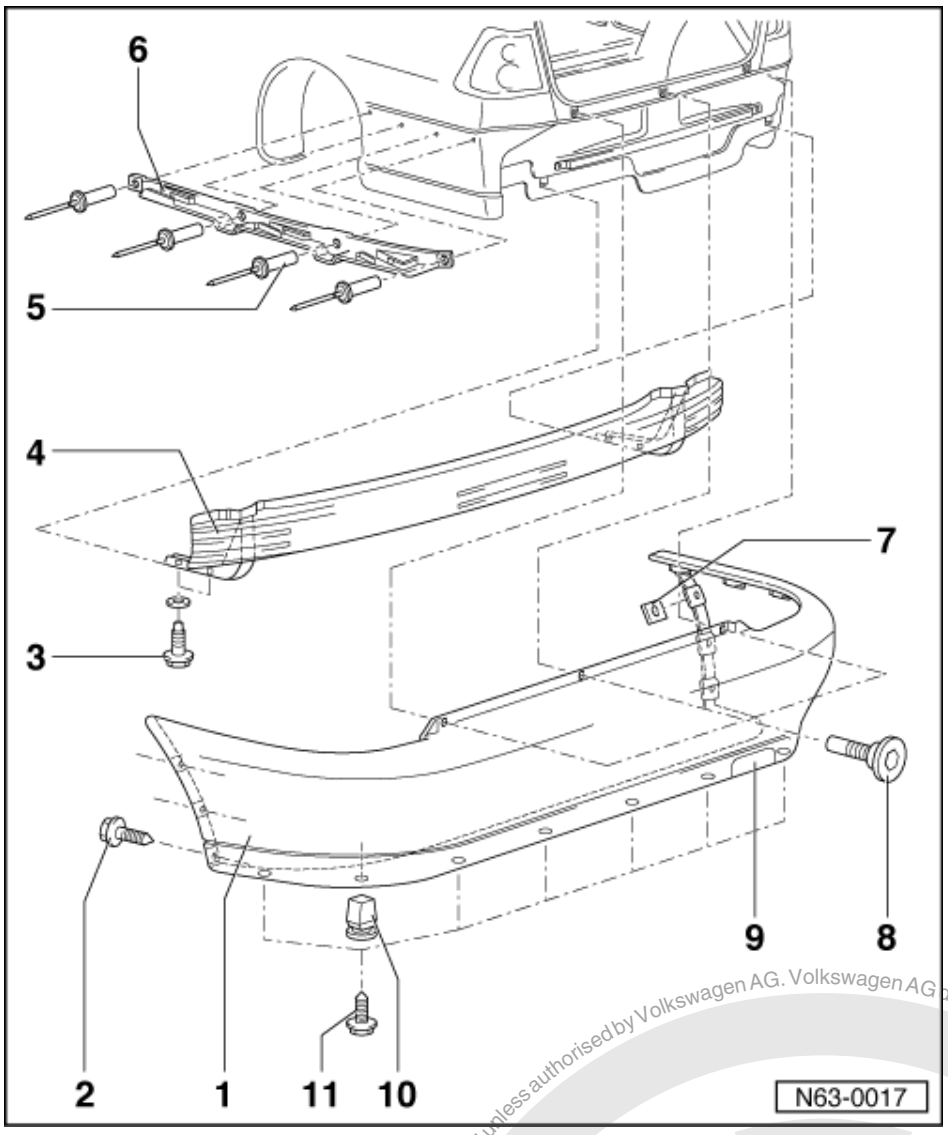

4 Deformation element
- Removing:
- Remove cover - 1 -.
- Remove hexagon bolts - 3 - and take deformation element off vehicle.

5 Pop rivet
- Install with pliers V.A.G 1663

6 Guide
- Secured with pop rivets - 5 -

7 Plate nut
- On bumper in area of wheel housing

8 Torx screw T 30
- 6 Nm

Protected by copyright. Copying for private or commercial purposes, in part or in whole, is not permitted unless authorised by Volkswagen AG. Volkswagen AG does not guarantee or accept any liability with respect to the correctness of information in this document. Copyright by Volkswagen AG.
satelettronica

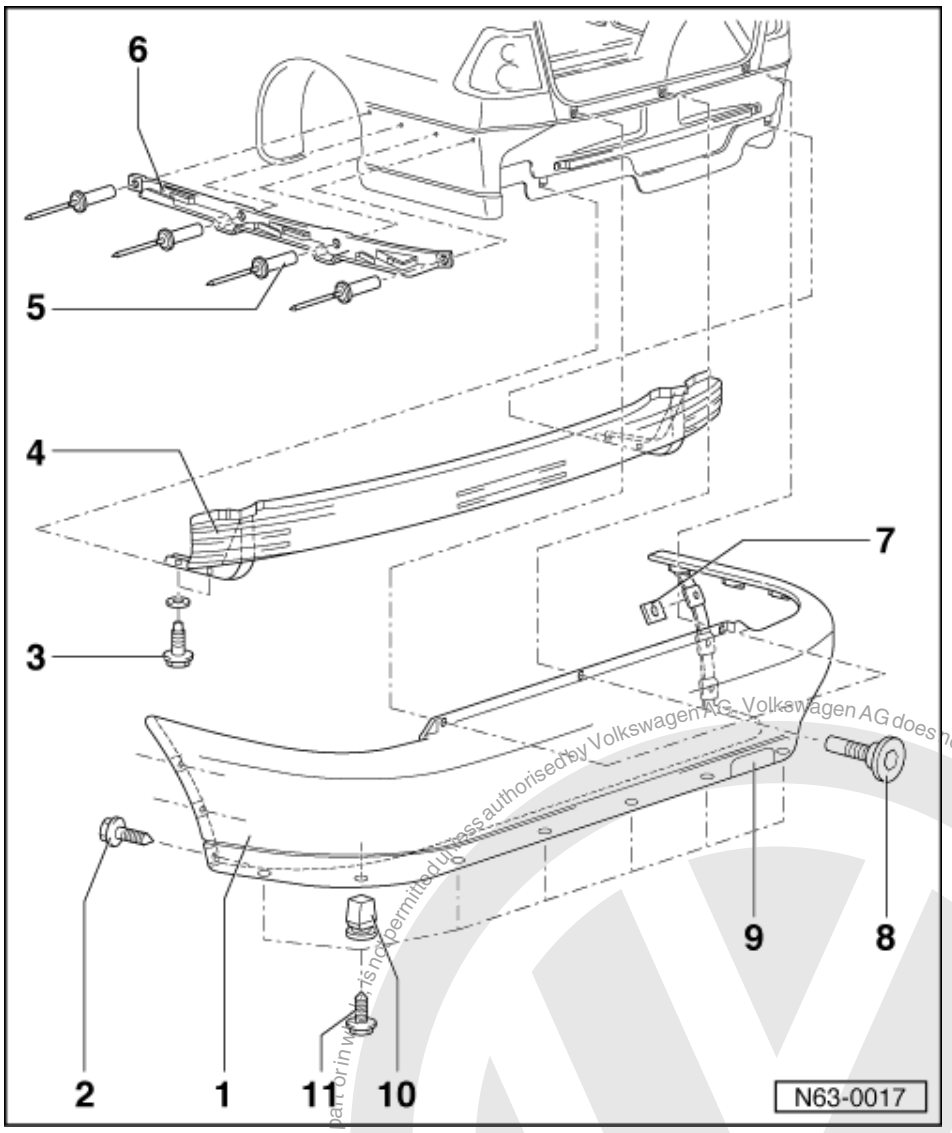

9 Cover/towing eye
10 Spreader nut
- Part of securing items for underfloor cover

11 Hexagon bolt
- 1.5 Nm
- Part of securing items for underfloor cover

Protected by copyright. Copying for private or commercial purposes, in part or in whole, is not permitted unless authorised by Volkswagen AG. Volkswagen AG does not guarantee or accept any liability with respect to the correctness of information in this document. Copyright by Volkswagen AG.
satelettronica

2.4 - Assembly overview (Polo Estate)

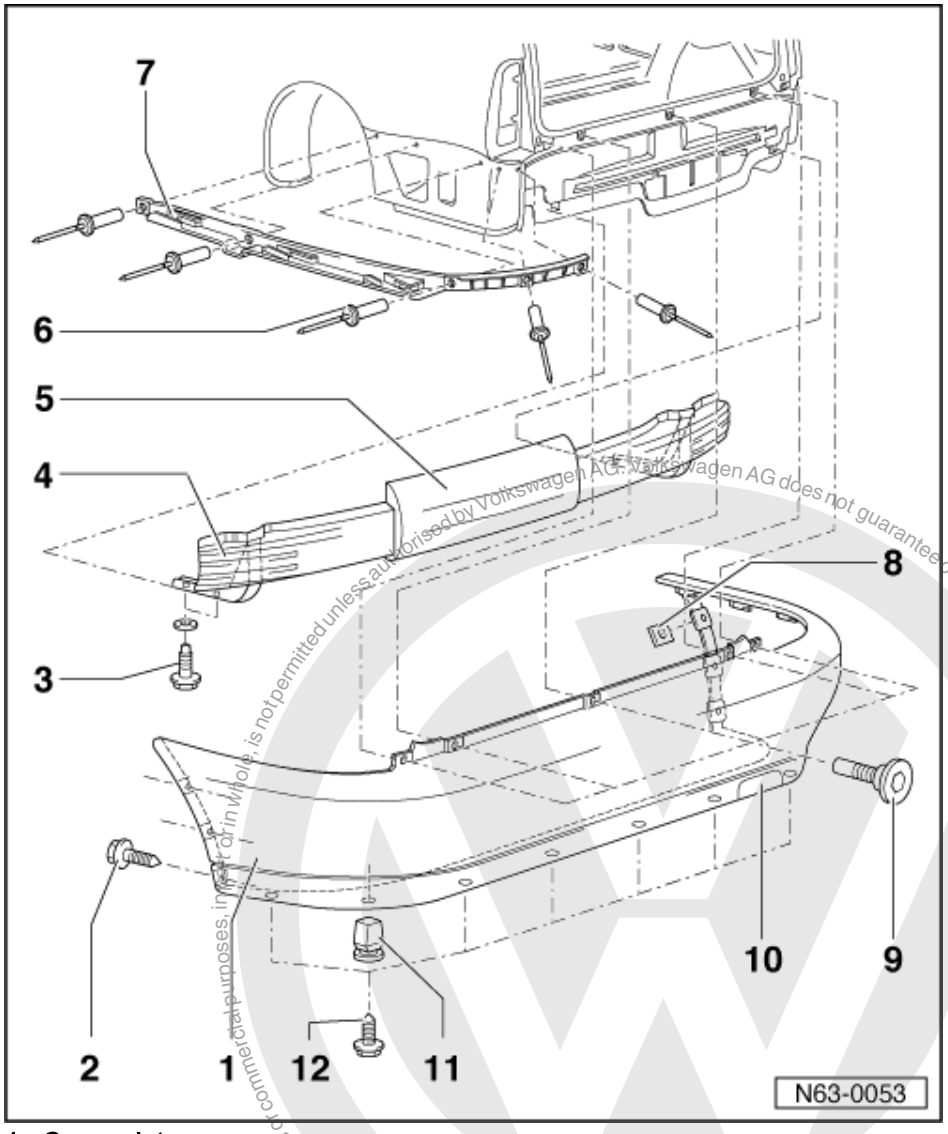

1 Cover plate
- Removing:
- Remove hexagon bolts - 12 -.
- Remove combi-bolts - 2 -.
- Open tailgate/boot lid.
- Remove Torx screws - 9 -
- Pull cover off to rear out of side guides -7-.

2 Combi bolt
- Used to secure wheel housing liner

3 Hexagon bolt
- 70 Nm

Protected by copyright. Copyright by Volkswagen AG.
Volkswagen AG does not guarantee or accept any liability with respect to the correctness of information in this document. Copyright by Volkswagen AG.
Copying for private or commercial purposes, in part or in whole, is not permitted unless authorised by Volkswagen AG.
satelettronica

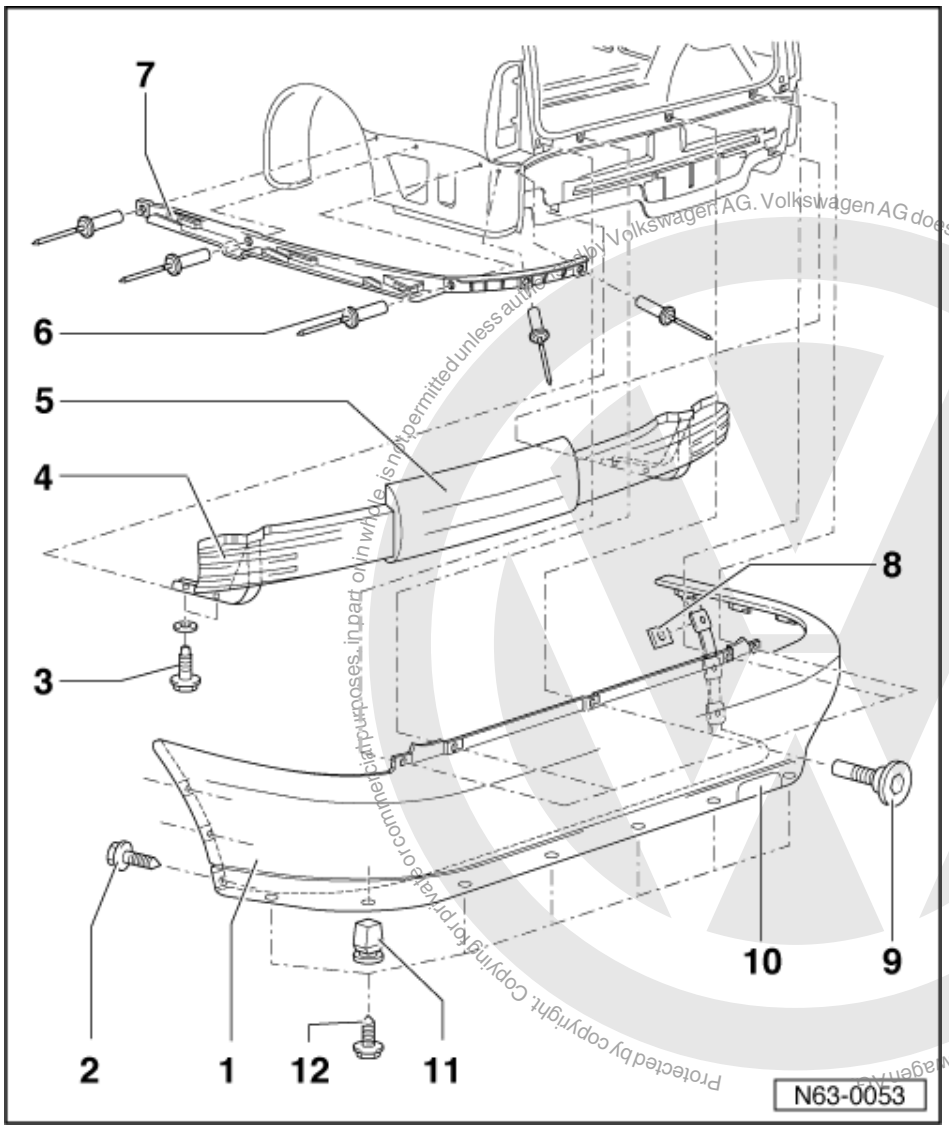

Protected by copyright. Copying for private or commercial purposes, in part or in whole, is not permitted unless authorised by Volkswagen AG. Volkswagen AG does not guarantee or accept any liability with respect to the correctness of information in this document. Copyright by Volkswagen AG.

satelettronica

4 Deformation element
- Removing:
- Remove cover - 1 -.
- Remove hexagon bolts - 3 - and take deformation element off vehicle.

5 Deformation element
- Bonded to deformation element - 4 -.
- Bond with universal adhesive D 001 200 if required

6 Pop rivet
- Install with pliers V.A.G 1663

7 Guide
- Secured with pop rivets - 6 -

8 Plate nut
- On bumper in area of wheel housing

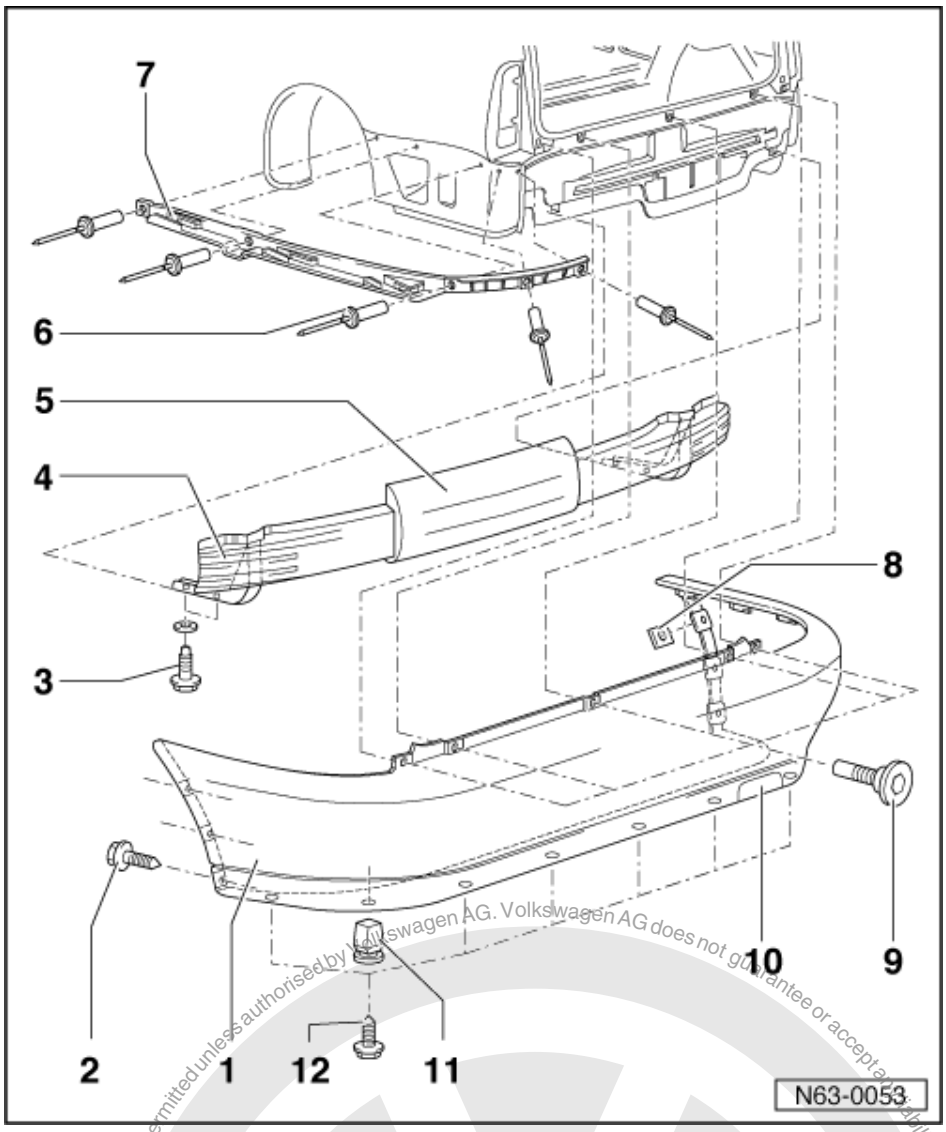

9 Torx screw T 30
- 6 Nm

10 Cover/towing eye

11 Spreader nut
- Part of securing items for underfloor cover

12 Hexagon bolt
- 1.5 Nm
- Part of securing items for underfloor cover

Protected by copyright. Copyright for private or commercial purposes, in whole or in part, is not permitted unless authorised by Volkswagen AG. Volkswagen AG does not guarantee or accept any liability with respect to the correctness of information in this document. Copyright by Volkswagen AG.
satelettronica

64 - Glazing

Protected by copyright. Copying for private or commercial purposes, in part or in whole, is not permitted unless authorised by Volkswagen AG. Volkswagen AG does not guarantee or accept any liability with respect to the correctness of information in this document. Copyright by Volkswagen AG.

1 - Flush bonded windows

1.1 - Flush bonded windows

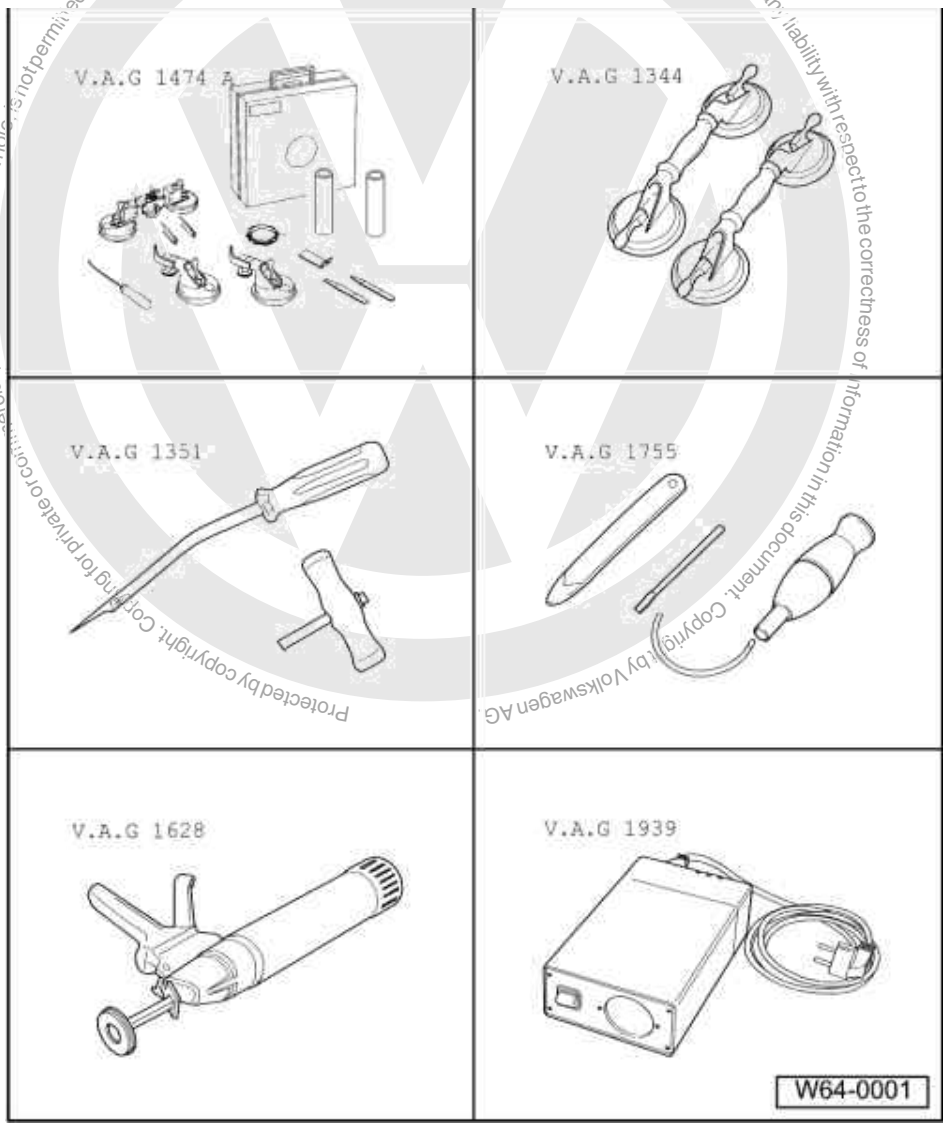

1.2 - Tools

- V.A.G 1474 A Cutting device for flush bonded windows
- V.A.G 1344 Suction lifter
- V.A.G 1351 Cutting tool
- V.A.G 1755 Window removal kit
- V.A.G 1628 Hand cartridge gun
- V.A.G 1939 Cartridge heater

satelettronica

Protected by copyright. Copying for private or commercial purposes, in part or in whole, is not permitted unless authorised by Volkswagen AG. Volkswagen AG does not guarantee or accept any liability with respect to the correctness of information in this document. Copyright by Volkswagen AG.

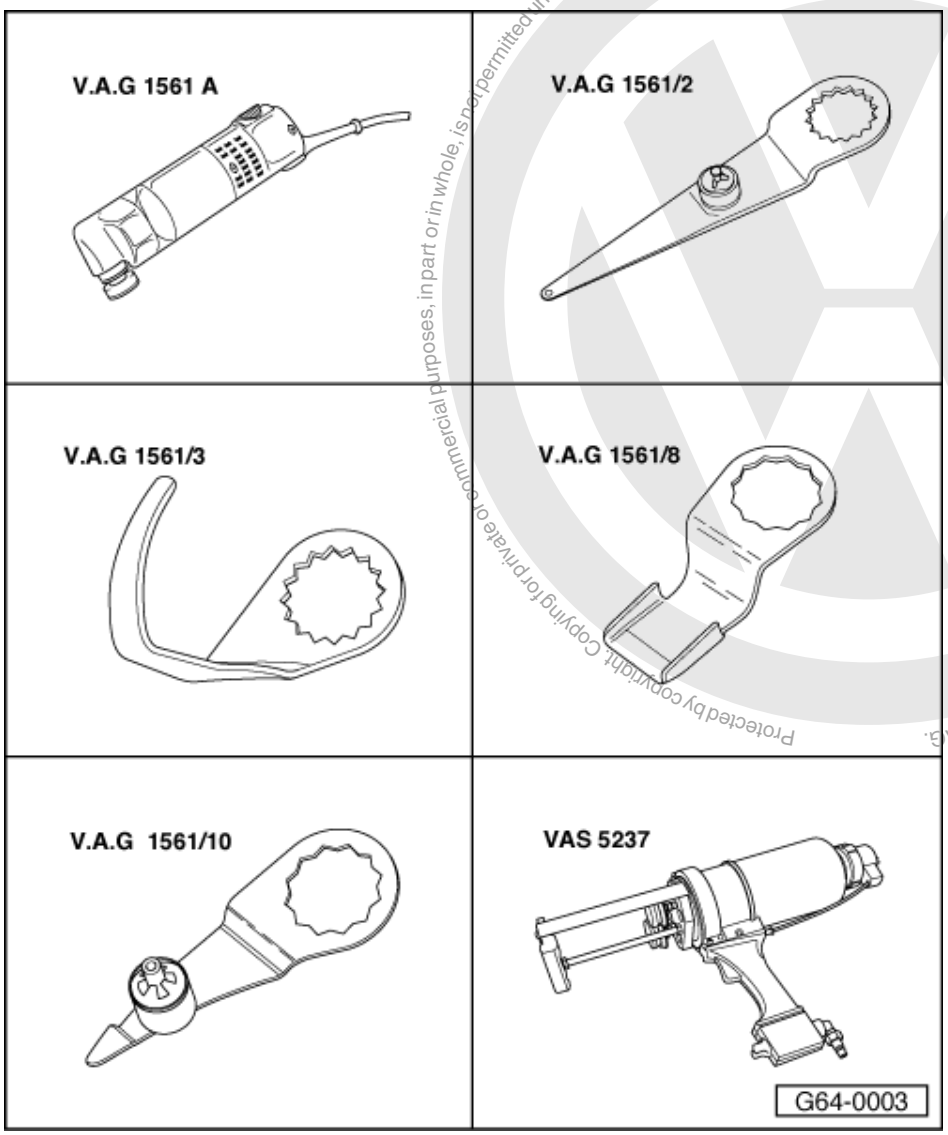

- V.A.G 1561 A Electric cutter
- V.A.G 1561/2 Cutting blade
- V.A.G 1561/3 Cutting blade
- V.A.G 1561/8 Cutting blade
- V.A.G 1561/10 Cutting blade
- VAS 5237 Double cartridge gun

1.3 - Materials

2K window adhesive	DA 004 600 A2 2),3)
- 1K- window adhesive	DH 009 100 03 4), 5)
Activator	D 181 801 A1 1)
Glass primer/paint primer	D 009 200 02 1)
Cleaning solution	D 009 401 04 1)
Primer applicator	D 009 500 25 1)
Adhesive remover	D 002 000 10 1)

1) Materials are stored in the box D 004 700.

satelettronica

2) Observe curing time => Page 143 .

3) To apply this material the double cartridge gun VAS 5237 must be used.

4) Heat, as per manufacturers instructions, using cartridge heater V.A.G 1939.

5) Small cartridge 110 ml for sealing and/or when a 400 ml double cartridge is not sufficient.

1.4 - Windscreen - Assembly overview

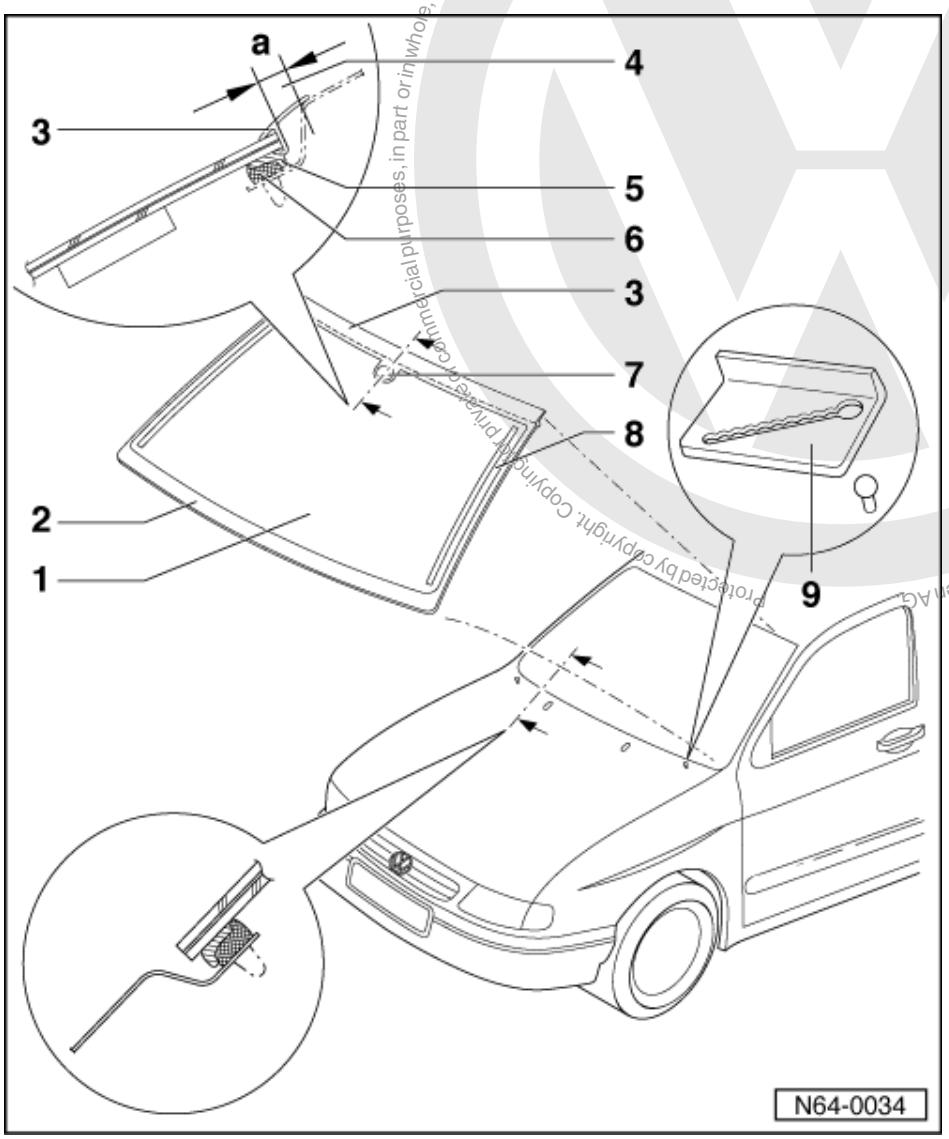

1 Windscreen
- Removing windscreen => Page 126
- Installing windscreen => Page 127

2 Ceramic layer

3 Seal

4 Dimension a = 10.5 mm

5 Sealing lip (component part of pre-coating)

6 PUR adhesive sealant
- Cross section of bead:
  Width = 7 mm

Protected by copyright. Copyright by Volkswagen AG. Volkswagen AG does not guarantee or accept any liability with respect to the correctness of information in this document. Copyright by Volkswagen AG. Commercial purposes, in part or in whole, is not permitted unless authorised by Volkswagen AG.
satelettronica

Height = 11 mm (including precoating, residual material on window glass and window flange)

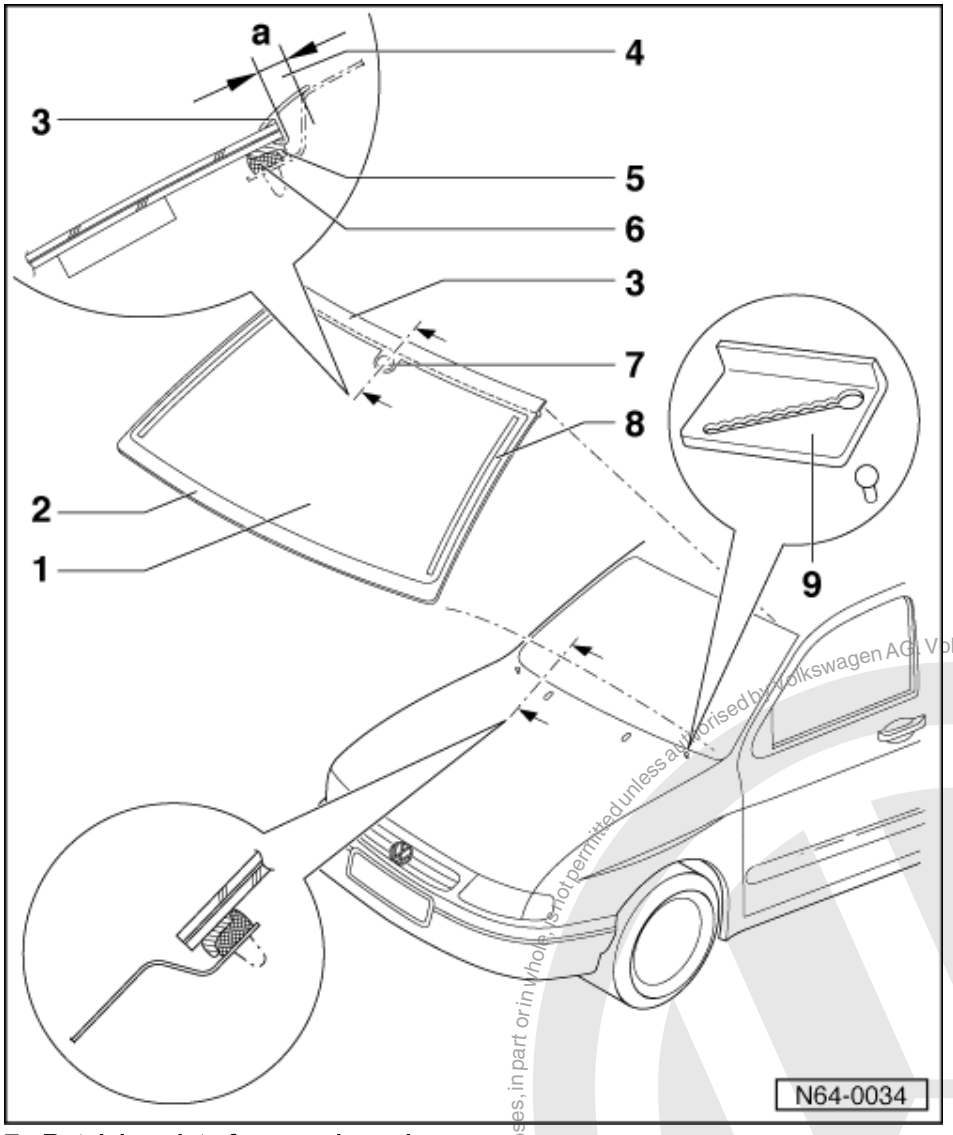

7 Retaining plate for rear-view mirror
- PUR adhesive

8 Profile
- Bonded

9 Adjustment piece
- To adjust upper window gap

1.5 - Removing windscreen

- Unclip roof moulding strips in A-pillar area.
- Remove front wiper arms (M8 hexagon nuts = 20 Nm).
- Remove plenum chamber cover => Page 167 .
- Remove interior mirror.

=> General body repairs, interior; Repair group 68; Interior mirror Interior mirror

- Remove A pillar trim.

Protected by copyright. Copying for private or commercial purposes, in part or in whole, is not permitted unless authorised by Volkswagen AG. Volkswagen AG does not guarantee or accept any liability with respect to the correctness of information in this document. Copyright by Volkswagen AG.
satelettronica

=> General body repairs, Interior; Repair group 70; Pillars and side panel trim Pillars and side panel trim

- Remove sun visors (this provides clearance between window flange and moulded headlining).
- Set adjustment piece back.
- Loosen sealing lip from window flange with a plastic wedge and spray in cleaning solution D 009 401 04 (as substitute for lubricant).

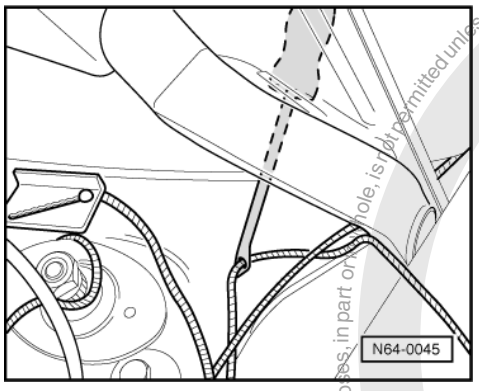

- Place cutting thread in window flange with help of tube (cutting wire may also be used).
- -> Pull cutting thread through the adhesive sealing material into inside of vehicle with broach (from V.A.G 1474). Cutting thread is laid double up to windscreen wiper shaft.

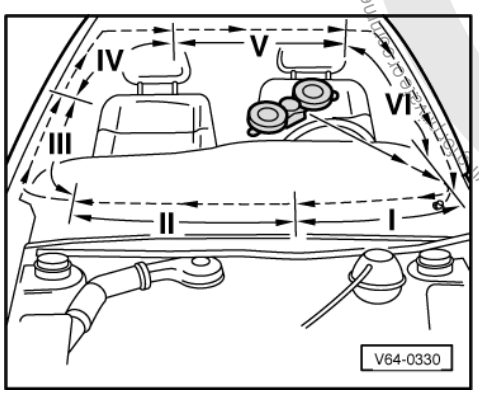

- -> Secure outer end of thread to windscreen wiper shaft.
- Secure inner end of thread to winding device.
- Place winding device V.A.G 1654 in "Position I".
- Move winding device according to position required and cut out windscreen glass.
- Press cutting thread against window glass with plastic wedge during cutting process, in order to have clearance at window flange and dash panel.

1.6 - Installing windscreen

Preparing old undamaged window for glazing => Page 139 .

Preparing new window for glazing => Page 140 .

Preparing body flange for glazing => Page 142 .

Installation instructions => Page 143 .

Curing time => Page 143 .

Protected by copyright. Copyright by Volkswagen AG.
Volkswagen AG. Volkswagen AG does not guarantee or accept any liability with respect to the correctness of information in this document. Copyright by Volkswagen AG.
satelettronica

1.7 - Side window (Polo Classic) - Assembly overview

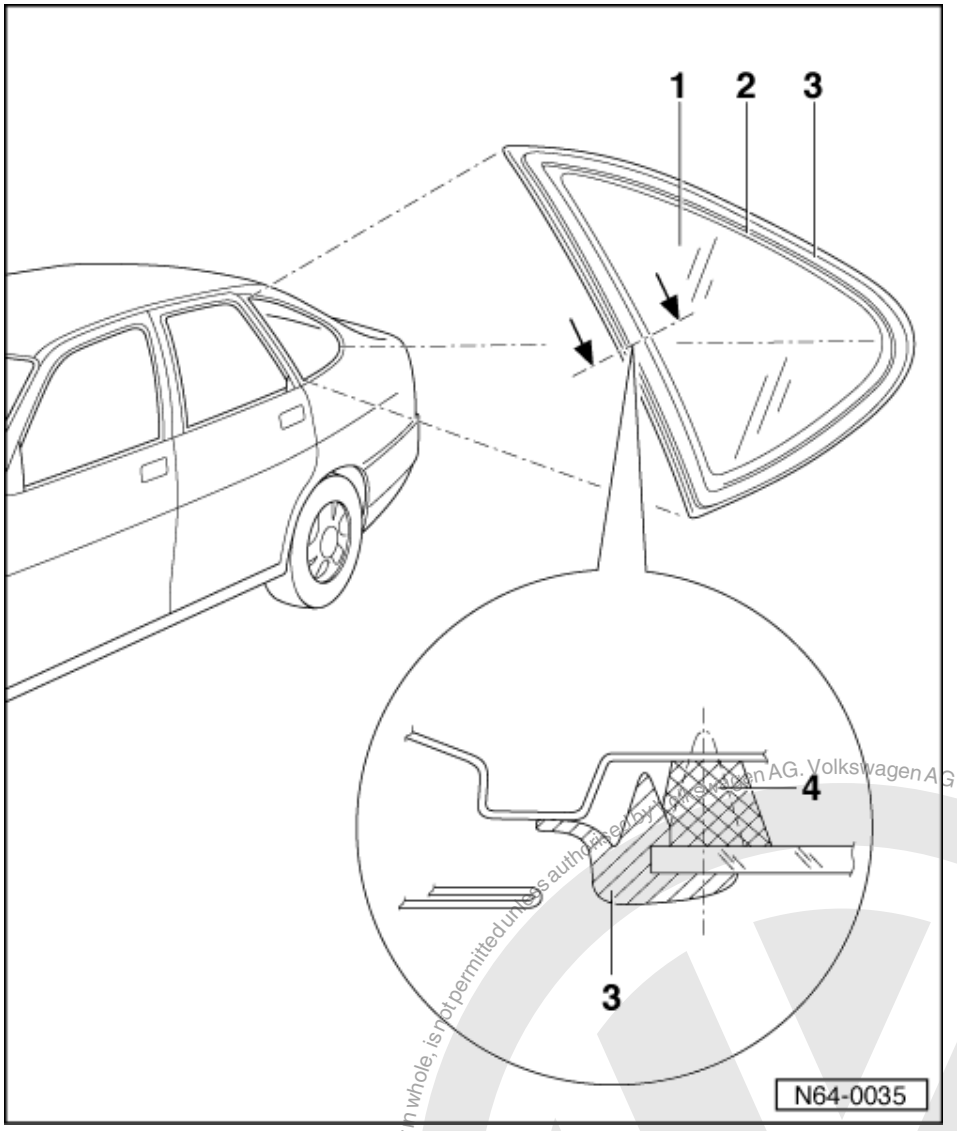

1 Side window
- Removing side window => Page 128
- Installing side window => Page 129

2 Ceramic layer

3 Sealing lip (component part of pre-coating)

4 PUR adhesive sealant
- Cross section of bead:
  Width = 7 mm
  Height = 11 mm (including pre-coating, residual material on window glass and window flange)

1.8 - Removing undamaged side window (Polo Classic)

- Removing rear shelf

=> General body repairs, interior; Repair group 70; Luggage compartment trim Luggage compartment trim

- Removing C and D pillar trim

satelettronica

=> General body repairs, Interior; Repair group 70; Pillars and side panel trim Pillars and side panel trim

- Cut through adhesive sealing material, from interior, with electric knife V.A.G 1561. When doing this do not damage paintwork if absolutely possible.

1.9 - Removing broken side window (Polo Classic)

Removing broken side window => Removing broken rear window Page 135 .

1.10 - Installing side window (Polo Classic)

Preparing old undamaged window for glazing => Page 139 .

Preparing new window for glazing => Page 140 .

Preparing body flange for glazing => Page 142 .

Installation instructions => Page 143 .

Curing time => Page 143 .

Protected by copyright. Copying for private or commercial purposes, in part or in whole, is not permitted unless authorised by Volkswagen AG. Volkswagen AG does not guarantee or accept any liability with respect to the correctness of information in this document. Copyright by Volkswagen AG.
satelettronica

1.11 - Side window (Polo Estate) - Assembly overview

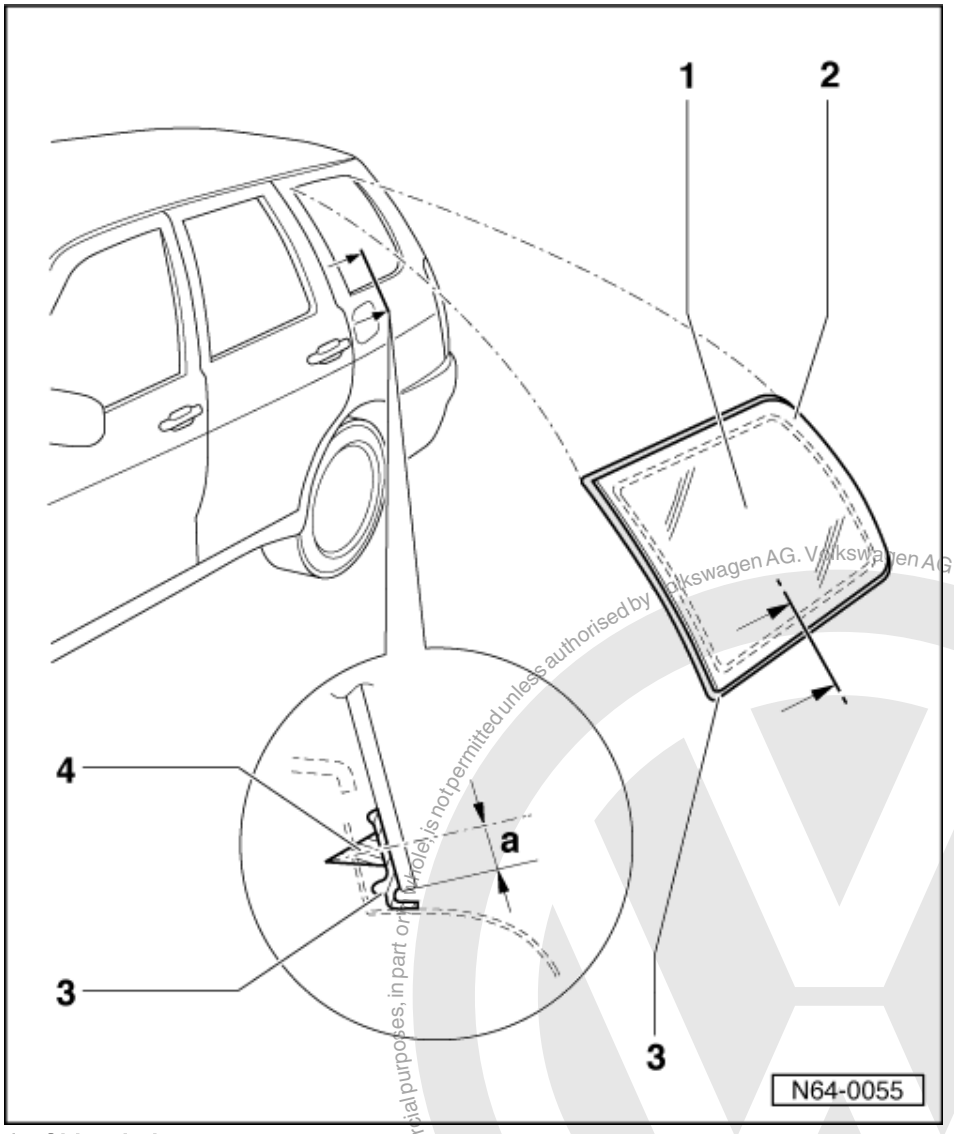

1 Side window
- Removing side window => Page 130
- Installing side window => Page 132

2 Ceramic layer

3 Sealing lip (component part of pre-coating)

4 PUR adhesive sealant
- Apply onto sealing lip - 3 -
- Dimension -a- = 7.5 mm
- Cross section of bead :
  Width = 7 mm
  Height = 11 mm (including pre-coating, residual material on window glass and window flange)

1.12 - Removing undamaged side window (Polo Estate)

- Remove luggage compartment cover

=> General body repairs, interior; Repair group 68; Luggage compartment cover Luggage compartment cover

Protected by copyright. Copying for private or commercial purposes, in part or in whole, is not permitted unless authorised by Volkswagen AG. Volkswagen AG does not guarantee or accept any liability with respect to the correctness of information in this document. Copyright by Volkswagen AG.
satelettronica

- Remove C pillar trim

=> General body repairs, Interior; Repair group 70; Pillars and side panel trim Pillars and side panel trim
- Remove D pillar trim

=> General body repairs, Interior; Repair group 70; Pillars and side panel trim Pillars and side panel trim
- Insert plastic wedge between sealing lip and window flange.

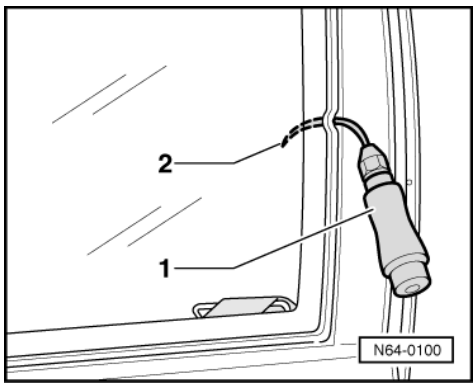

- Loosen sealing lip from window flange all round and spray in cleaning solution D 009 401 04 (as substitute for lubricant).
- -> With help of handle -1- guide trimming needle -2- under sealing lip and puncture through adhesive bead.

The trimming needle must be guided as close as possible to the window.
- Unscrew handle and pass cutting thread through eye of needle.

- Pull cutting thread towards inside (use pliers and gloves).

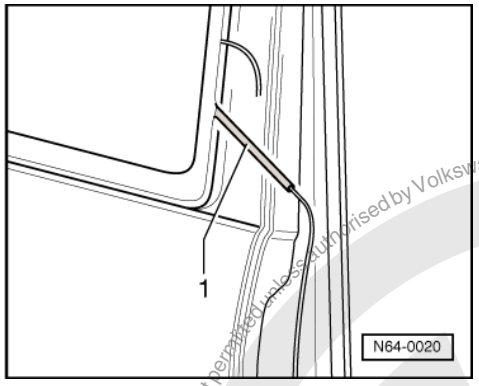

- -> Guide in cutting thread between lip and window flange with help of tube -1- (If the cutting thread should break, then cutting wire can also be used).
- If the gap is too small guide cutting thread on outside and press under the lip with a plastic wedge.
- Place cutting thread around the side window.

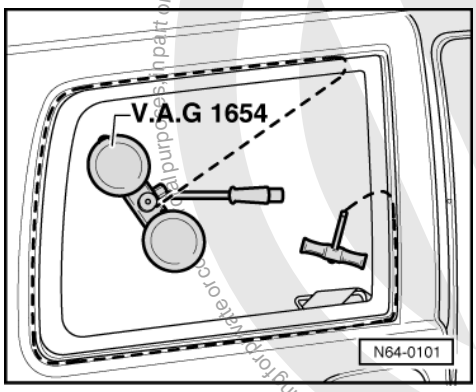

Protected by copyright. Copying for private or commercial purposes, in part or in whole, is not permitted unless authorised by Volkswagen AG. Volkswagen AG does not guarantee or accept any liability with respect to the correctness of information in this document. Copyright by Volkswagen AG.
satelettronica

- -> Pull outer end of thread into interior and attach onto pulling handle V.A.G 1351/1 to counter hold.
- Secure inner end of thread on winding device V.A.G 1654 and cut out window by moving the winding device as necessary.
- Press cutting thread against window glass with plastic wedge during cutting process, in order to have clearance at window flange.

1.13 - Removing broken side window (Polo Estate)

Removing broken side window => Page 138 , Removing broken side window.

1.14 - Installing side window (Polo Estate)

Preparing old undamaged window for glazing => Page 139 .

Preparing new window for glazing => Page 140 .

Preparing body flange for glazing => Page 142 .

Installation instructions => Page 143 .

Curing time => Page 143 .

Protected by copyright. Copying for private or commercial purposes, in part or in whole, is not permitted unless authorised by Volkswagen AG. Volkswagen AG does not guarantee or accept any liability with respect to the correctness of information in this document. Copyright by Volkswagen AG.

satelettronica

1.15 - Rear window (Polo Classic) - Assembly overview

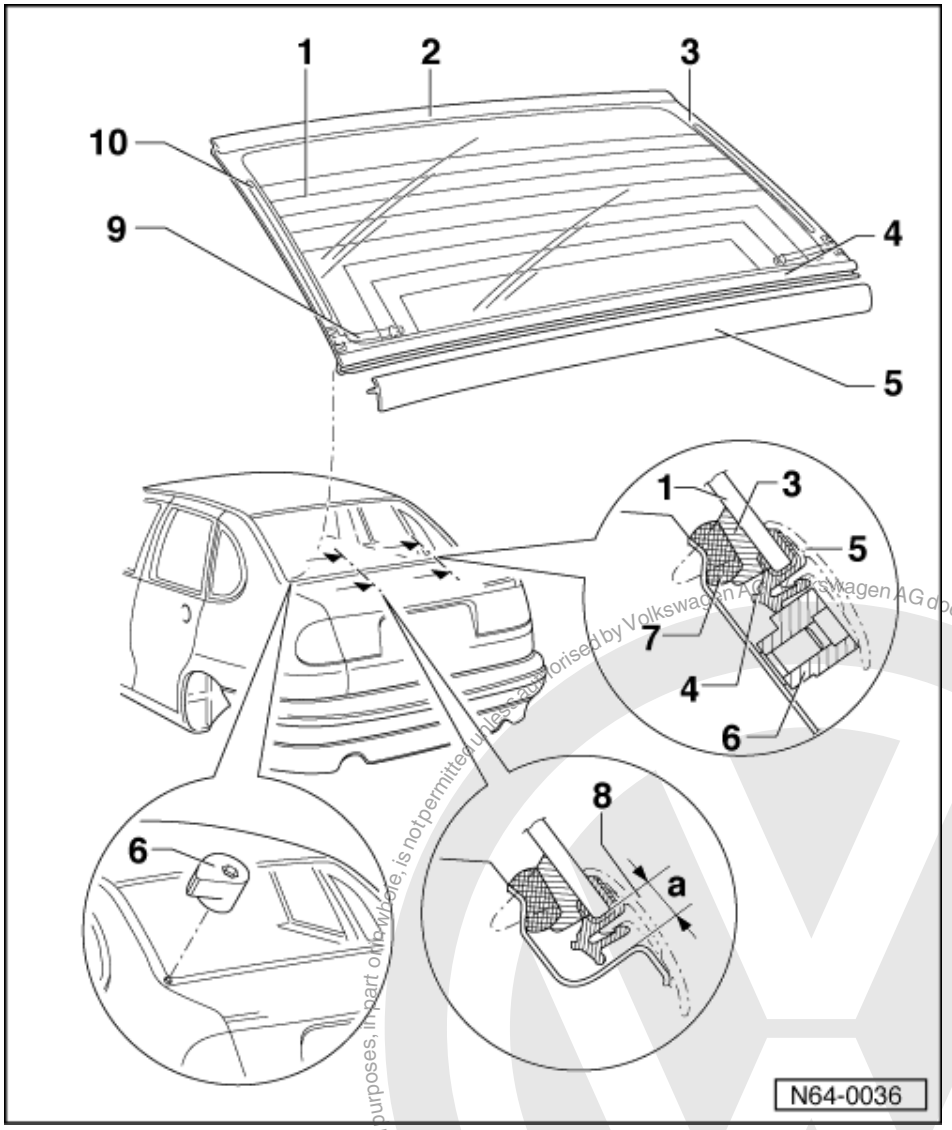

1 Rear window
- Removing rear window => Page 134
- Installing rear window => Page 135

2 Seal

3 Ceramic layer

4 Sealing lip (component part of precoating)

5 Seal

6 Eccentric
- To adjust upper window gap

Protected by copyright. Copying for private or commercial purposes, in part or in whole, is not permitted unless authorised by Volkswagen AG. Volkswagen AG does not guarantee or accept any liability with respect to the correctness of information in this document. Copyright by Volkswagen AG.
satelettronica

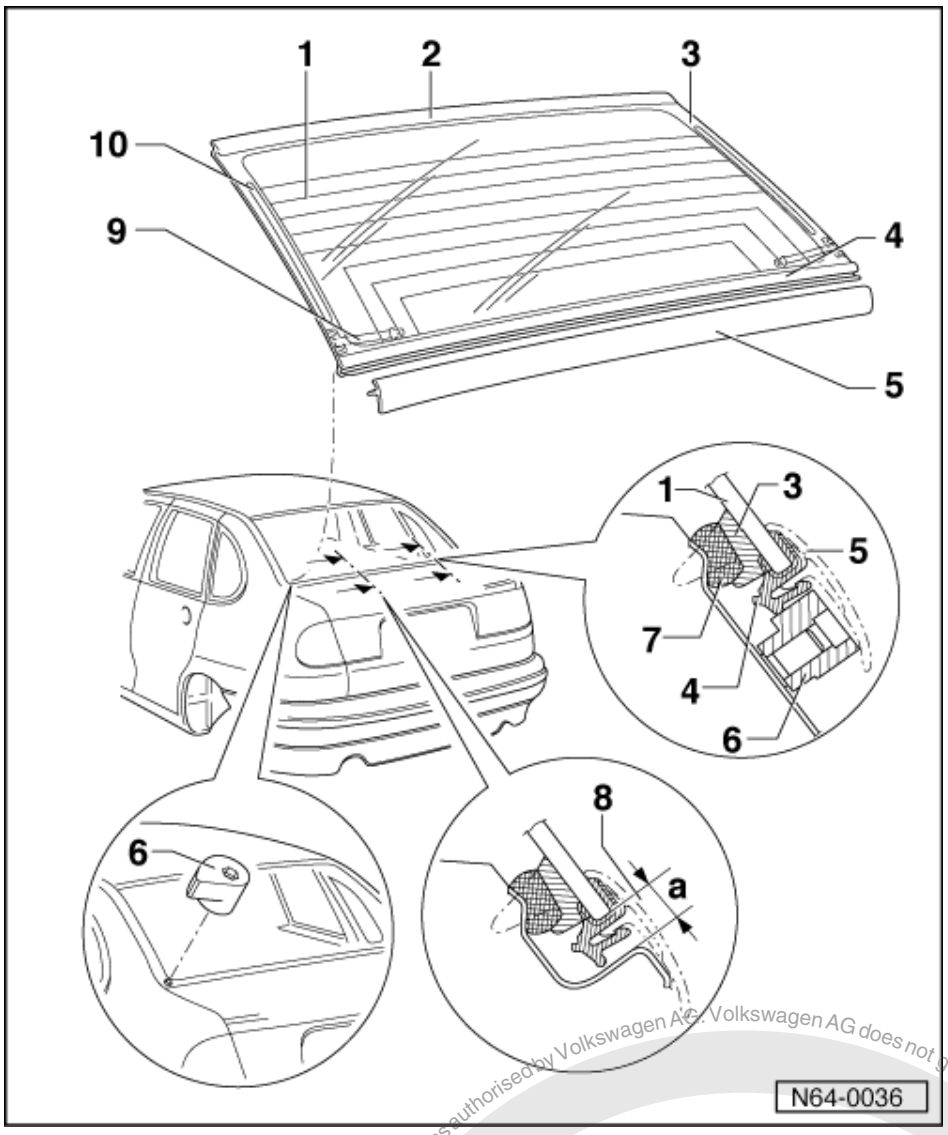

7 PUR adhesive sealant
- Cross section of bead :
  Width = 7 mm
  Height = 11 mm (including pre-coating, residual material on window glass and window flange)

8 Dimension a = 4 mm
9 Window heater connection
10 Profile
- Bonded

1.16 - Removing undamaged rear window (Polo Classic)

- Unclip roof moulding strips in area of C pillar.
- Pull off moulded headliner end strip.
- Removing rear shelf

=> General body repairs, interior; Repair group 70; Luggage compartment trim Luggage compartment trim

- Removing C and D pillar upper trim

=> General body repairs, Interior; Repair group 70; Pillars and side panel trim Pillars and side panel trim

Protected by copyright. Copying for private or commercial purposes, in part or in whole, is not permitted unless authorised by Volkswagen AG. Volkswagen AG does not guarantee or accept any liability with respect to the correctness of information in this document. Copyright by Volkswagen AG.
satelettronica

- Pull off connections for heated rear window and press connecting tabs onto window.
- Remove 3rd brake light.

=> Electrical system; Repair group 94

- Loosen sealing lip at top and bottom from window flange with a plastic wedge.
- Set back eccentric.
- Continue remainder of removal as per removing windscreen => Page 126 , Removing windscreen.

1.17 - Removing broken rear window (Polo Classic)

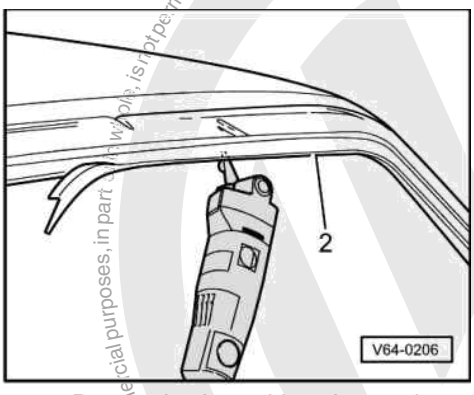

- -> Protect body and interior against damage from glass splinters.
- Remove pieces of glass up to adhesive sealing material.
- Pull off connectors for heated rear window.
- Cover flange -2- all round with textile reinforced adhesive tape.
- Cut through adhesive sealing material (with remainders of glass) in window opening with electric cutter and blade V.A.G 1561/10 (with stop roller).

Warning! Always wear protective goggles and leather gloves.

1.18 - Installing rear window (Polo Classic)

Preparing old undamaged window for glazing => Page 139 .

Preparing new window for glazing => Page 140 .

Preparing body flange for glazing => Page 142 .

Installation instructions => Page 143 .

Curing time => Page 143 .

satelettronica

1.19 - Rear window (Polo Estate) - Assembly overview

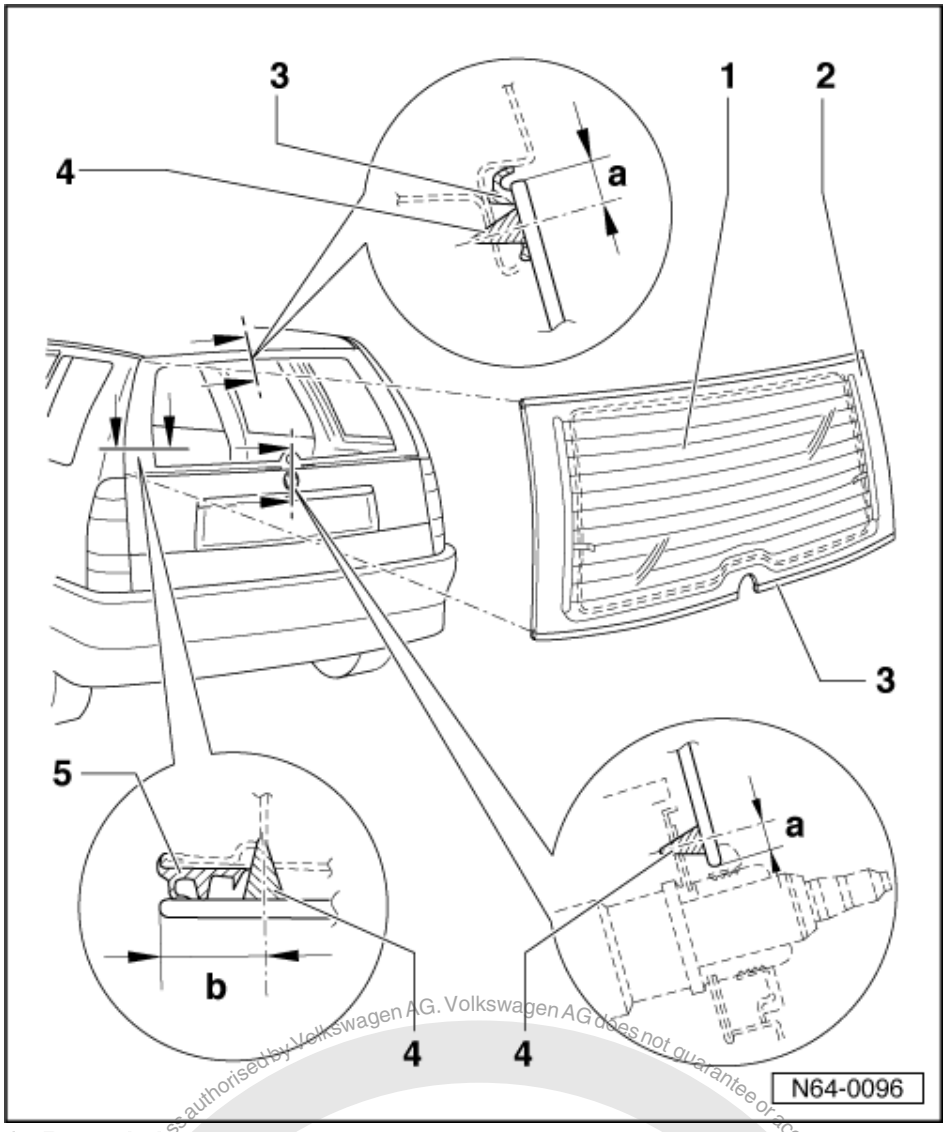

1 Rear window
- Removing rear window => Page 136
- Installing rear window => Page 138

2 Ceramic layer

3 Sealing lip (component part of precoating)

4 PUR adhesive sealant
- Cross section of bead :
  Width = 7 mm
  Height = 11 mm (including pre-coating, residual material on window glass and window flange)
- Dimension -a- = 7.5 mm
- Dimension -b- = 17 mm

5 Stop profile

1.20 - Removing undamaged rear window (Polo Estate)

- Remove rear wiper arm (M8 hexagon nut = 15 Nm).
- Remove tailgate/boot lid trim

satelettronica
Protected by copyright. Copying for private or commercial purposes, in part or in whole, is not permitted unless authorised by Volkswagen AG. Volkswagen AG does not guarantee or accept any liability with respect to the correctness of information in this document. Copyright by Volkswagen AG.

=> General body repairs, interior; Repair group 70; Tailgate/boot lid trim Tailgate/boot lid trim

- Remove 3rd brake light.

=> Electrical system; Repair group 94

- Remove rear wiper motor.

=> Electrical system; Repair group 92

- Pull off connections for heated rear window and press connecting tabs onto window.

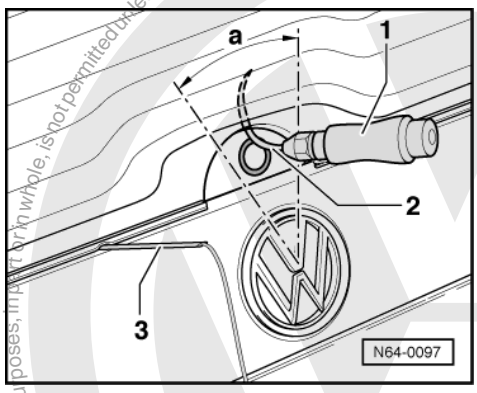

- Loosen sealing lip from window flange all round with plastic wedge and spray in cleaning solution D 009 401 04 (as substitute for lubricant).
- -> Guide in cutting thread between sealing lip and window flange with help of tube -3- (cutting wire may also be used).
- With help of handle -1- guide trimming needle -2- under sealing lip within illustrated area (angle -a-) and puncture through adhesive bead.
- Unscrew handle and pass cutting thread through eye of needle.
- Pull a cutting thread end towards inside (use pliers and gloves).
- If the gap is too small guide cutting thread on outside and push under the lip with a plastic wedge.

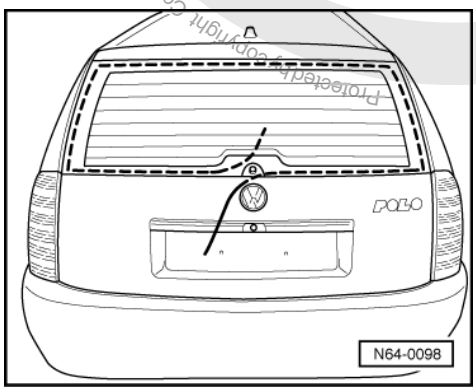

- -> Place cutting thread round rear window as shown.

Note:

Press in cutting thread deep enough in order to avoid damaging the sealing lip and/or spacing lip.

- Pull outer end of thread into interior and attach onto pulling handle V.A.G 1351/1 to counter hold.

Protected by copyright. Copyright by Volkswagen AG.
Copyright by Volkswagen AG. Volkswagen AG does not guarantee or accept any liability with respect to the correctness of information in this document.
Copyright by Volkswagen AG, in whole, is not permitted unless authorised by Volkswagen AG. Volkswagen AG does not guarantee or accept any liability with respect to the correctness of information in this document.
Copyright by Volkswagen AG.
satelettronica

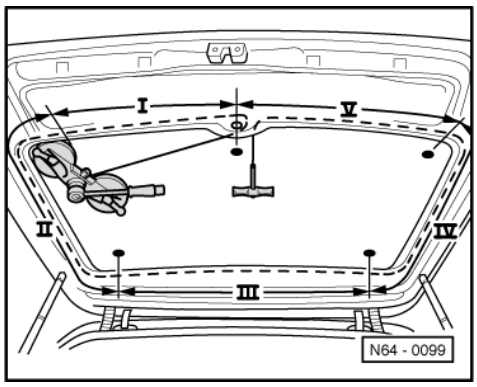

- -> Secure inner end of thread on winding device.
- Place winding device V.A.G 1654 in "Position I".
- Move winding device according to position required and cut out window glass.
- Press cutting thread against window glass with plastic wedge during cutting process, in order to have clearance at window flange.

1.21 - Removing broken rear window (Polo Estate)

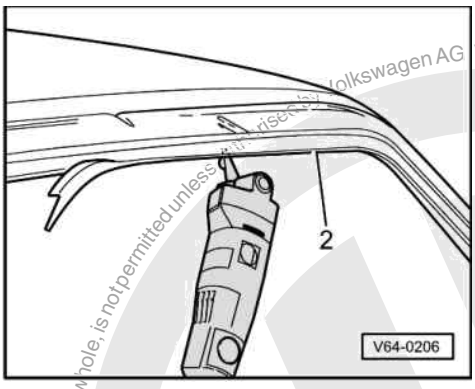

- -> Protect body and interior against damage from glass splinters.
- Remove pieces of glass up to adhesive sealing material.
- Pull off connectors for heated rear window.
- Cover flange -2- all round with textile reinforced adhesive tape.
- Cut through adhesive sealing material (with remainders of glass) in window opening with electric cutter and blade V.A.G 1561/10 (with stop roller).

Warning!
Always wear protective goggles and leather gloves.

1.22 - Installing rear window (Polo Estate)

Preparing old undamaged window for glazing => Page 139 .

Preparing new window for glazing => Page 140 .

Preparing body flange for glazing => Page 142 .

Installation instructions => Page 143 .

Curing time => Page 143 .

Volkswagen AG. Volkswagen AG does not guarantee or accept any liability with respect to the correctness of information in this document. Copyright by Volkswagen AG. Protected by copyright. Copying for private or commercial purposes, in part or in whole, is not permitted unless authorised by Volkswagen AG.
satelettronica

1.23 - Preparing old undamaged window for glazing

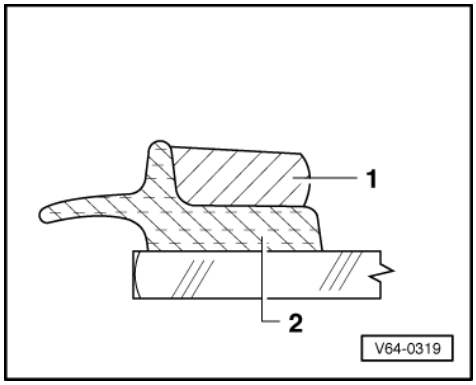

-> Note:

When reusing an undamaged window, cut back remaining adhesive sealing material -1- to thickness of 1 to 2 mm using an electric cutter and scraper V.A.G 1561/10 with stop roller. Do not damage the pre-coating or sealing lip with spacing lip -2-.

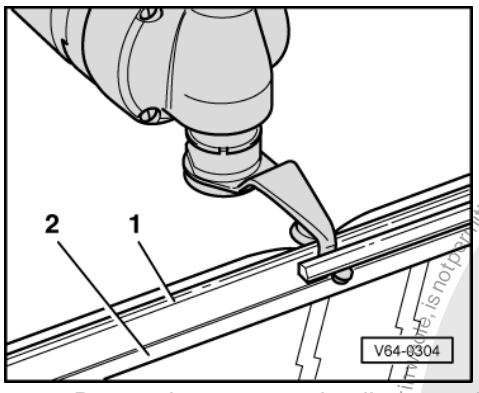

- -> Do not damage spacing lip -1- and ceramic layer -2-.

Warning!
Do not prime, activate or use cleaning agent on adhesive surface.
Keep adhesive surface clean and grease-free.

Note:

If the bonding does not take place immediately after cutting back the remaining adhesive material, it must then be activated.

Protected by copyright. Copying for private or commercial purposes, in part or in whole, is not permitted unless authorised by Volkswagen AG. Volkswagen AG does not guarantee or accept any liability with respect to the correctness of information in this document. Copyright by Volkswagen AG.
satelettronica

1.24 - Preparing new window for glazing

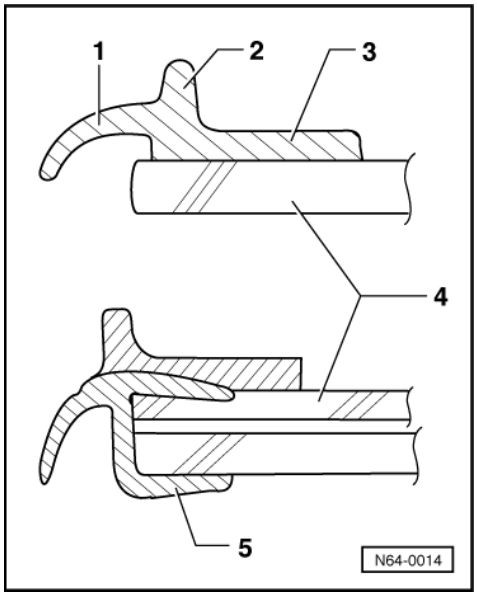

-> New windows are supplied pre-coated with PUR. The pre-coating consists of items 1, 2 and 3.

1 - Sealing lip
2 - Spacing lip
3 - Area for application of adhesive bead
4 - Window glass
5 - Surround or sealing profile

- Rub down pre-coating with a dry cloth which is not fluffy.

Warning!
Do not prime precoating and do not treat with cleaning agent.

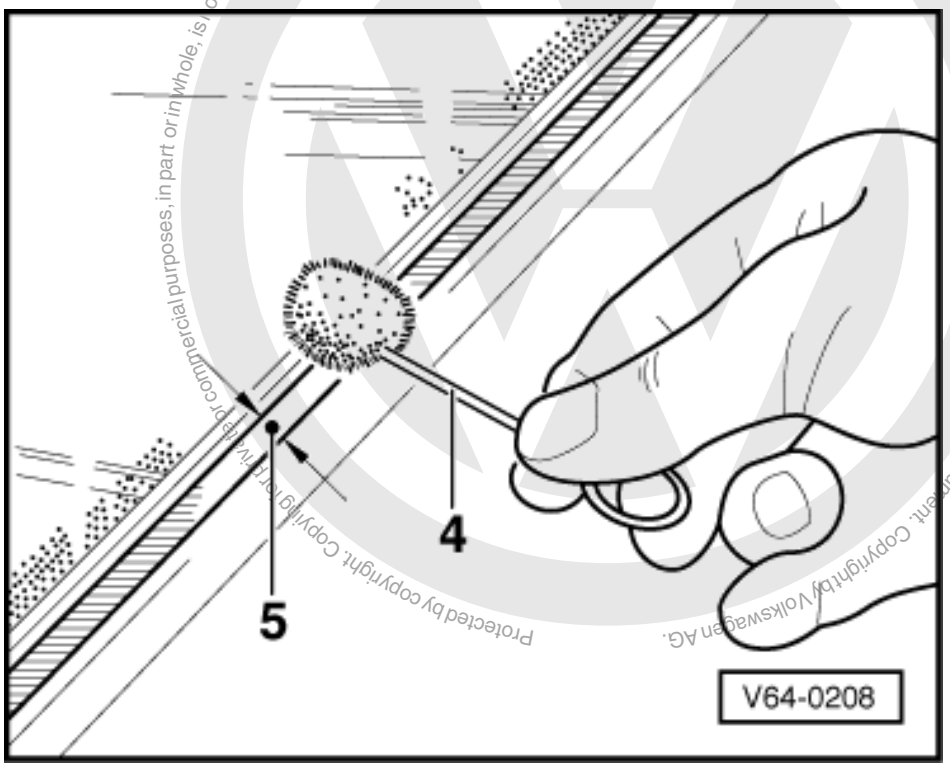

Protected by copyright. Copyright by Volkswagen AG.
Copyright by Volkswagen AG does not guarantee or accept any liability with respect to the correctness of information in this document.
Copyright by Volkswagen AG. Not permitted unless authorised by Volkswagen AG for commercial purposes, in part or in whole, is
satelettronica

- -> Apply a thin coat of activator D 181 801 A1 only on pre-coating -2- of the window using applicator -1- D 009 500 25 (felt ball with wire).
- Allow activator to air dry for at least 10 minutes.

Note:

Activator must not have contact with paint, otherwise the paint finish will be damaged.

1.25 - Preparing new window for glazing (Polo Estate)

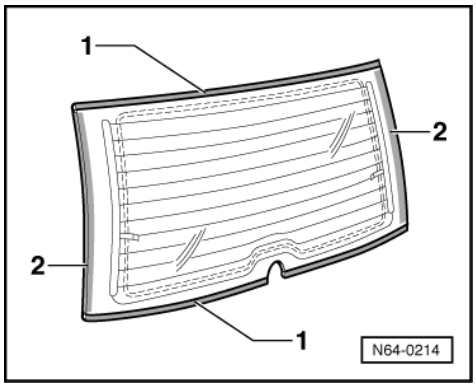

-> New windows are supplied at the top and bottom with PUR coating -1- and in the side area -2- with ceramic coating.

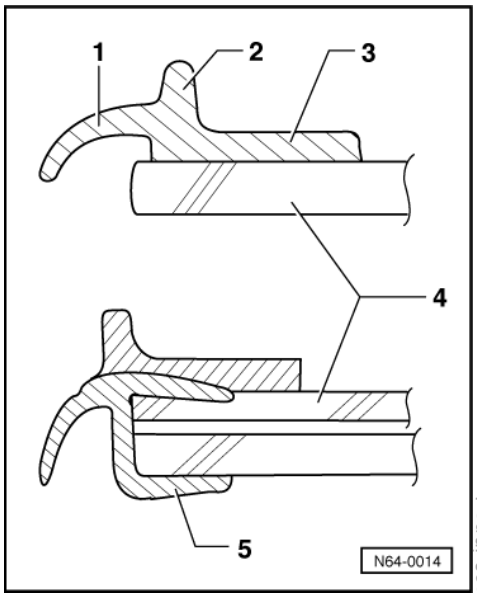

-> The pre-coating consists of items 1, 2 and 3.

1 - Sealing lip
2 - Spacing lip
3 - Area for application of adhesive bead
4 - Window glass
5 - Surround or sealing profile

- Rub down pre-coating with a dry, lint-free cloth.

satelettronica
Protected by copyright. Copying for private or commercial purposes, in part or in whole, is not permitted unless authorised by Volkswagen AG. Volkswagen AG does not guarantee or accept any liability with respect to the correctness of information in this document. Copyright by Volkswagen AG.

Warning!
Do not prime precoating and do not treat with cleaning agent.

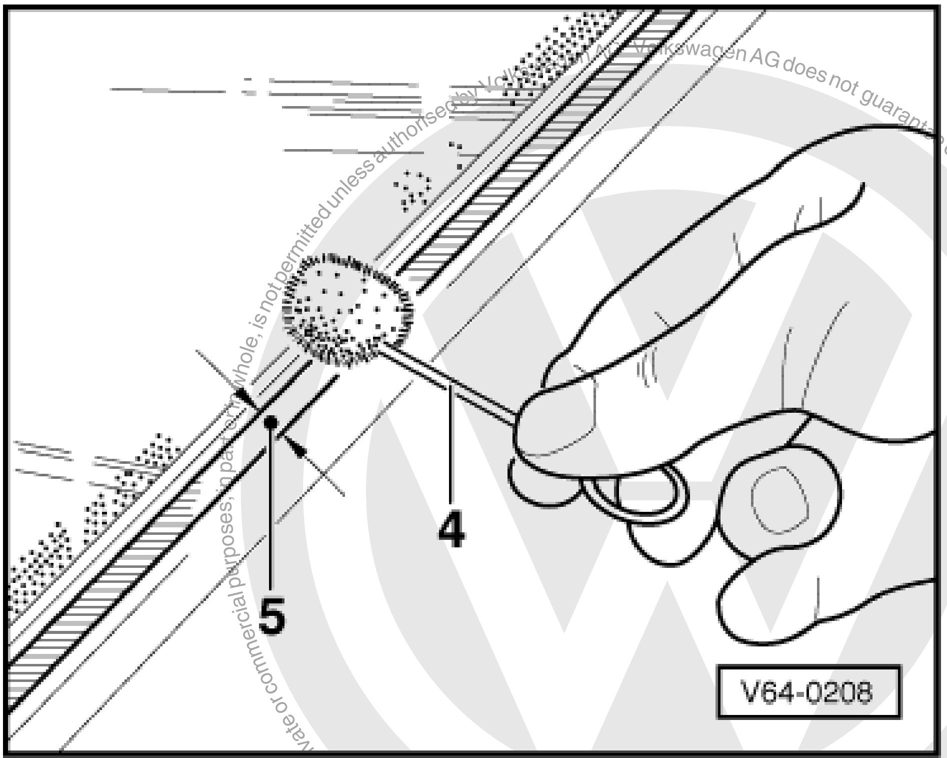

- -> Apply a thin coat of activator D 181 801 A1 only on pre-coating -2- of the window using applicator -1- D 009 500 25 (felt ball with wire).
- Allow activator to air dry for at least 10 minutes.

Note:

Activator must not have contact with paint, otherwise the paint finish will be damaged.

Protected by copyright. Copying for private or commercial purposes, in part or in whole, is not permitted unless authorised by Volkswagen AG. Volkswagen AG does not guarantee or accept any liability with respect to the correctness of information in this document. Copyright by Volkswagen AG.

1.26 - Preparing body flange for glazing

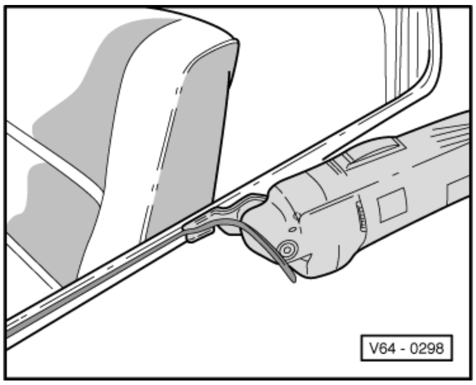

- -> Cut back remaining material on window flange with scraping blade V.A.G 1561/8, but do not remove completely.

Notes:

- Remaining material is required as a base for better adhesion of the new coat of adhesive sealing material to be applied. Keep dirt and grease off of adhesive surfaces.

satelettronica

Warning!
Activator must not have contact with paint, otherwise the paint finish will be damaged.

Exception: If the bonding is not carried out immediately after cutting back the remaining material, it must then be activated.

- If the window flange has been repaired or partially renewed, after painting, the area concerned must be cleaned and primed again.

1.27 - Installation instructions

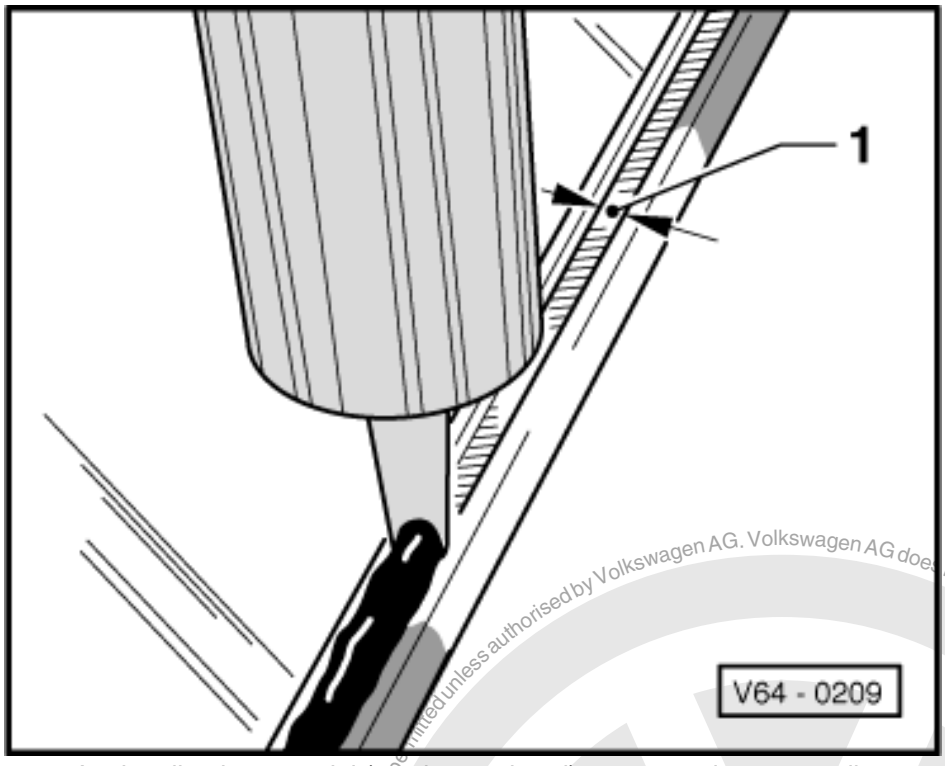

- -> Apply adhesive material (continuous bead) to pre-coating -1-, applicator at right angle to window.

Warning!
Window must be installed within 10 minutes, otherwise adhesive properties of adhesive sealant will be impaired.

- With help of two double suction cups (V.A.G 1344) install glass pane in window opening, centre and press in onto the spacing lip.
- Secure window glass in position with adhesive tape during the curing process.
- If the adhesive bead has been applied too thick and the adhesive expands onto the area of the window heating, then the excess adhesive must be removed.

1.28 - Curing time

Warning!
The special standards must be adhered to when replacing bonded windows. One of these standards for example is, that a freshly bonded windscreen must comply with the safety elements, even in an accident, once the adhesive has exceeded the prescribed curing time.

Protected by copyright. Copyright by Volkswagen AG.
Copy for private or commercial purposes, in part or in whole, is not permitted unless authorised by Volkswagen AG. Volkswagen AG does not guarantee or accept any liability with respect to the correctness of information in this document.
satelettronica

With the new 2K adhesive DA 004 600 A2 a shorter curing time, as shown in the table, has been attained.

Window	Vehicle	Window adhesive	Curing time
Windscreen	With and without Airbag	DA 004 600 A2	3 hours
Side windows and Rear windows			

Curing time means: from bonding window into taking vehicle into use. During the curing time the vehicle must stand on a level surface at room temperature (at least15°C).

Warning!
Vehicle is only safe to use once minimum curing time has elapsed.

1.29 - Touching up paint damage

Paint composition is to be restored according to specifications in Workshop Manual "Vehicle Painting".

The following repair method is suitable for damaged paint finish in an area which is not visible:

- Painting over twice (wet-on-wet) with glass/paint primer D 009 200 02 - air drying time = approx. 10 minutes.

1.30 - Cleaning off surplus adhesive sealing material

- It is recommended to use adhesive remover D 002 000. 10 as a cleaning solution. Application of this product requires conformance with safety precautions.

Warning!
Glass which has just been installed should not be pressed outwards whilst cleaning from inside of vehicle.

- First clean painted surface roughly with a dry cloth. Remove remaining adhesive with adhesive remover D 002 000. 10.
- Cleaning plastic trim:
  Allow adhesive sealing material to cure (approx. one hour) and then peel off.

Protected by copyright. Copying for private or commercial purposes, in part or in whole, is not permitted unless authorised by Volkswagen AG. Volkswagen AG does not guarantee or accept any liability with respect to the correctness of information in this document. Copyright by Volkswagen AG.

satelettronica

2 - Windows secured by threaded fasteners

2.1 - Windows secured by threaded fasteners

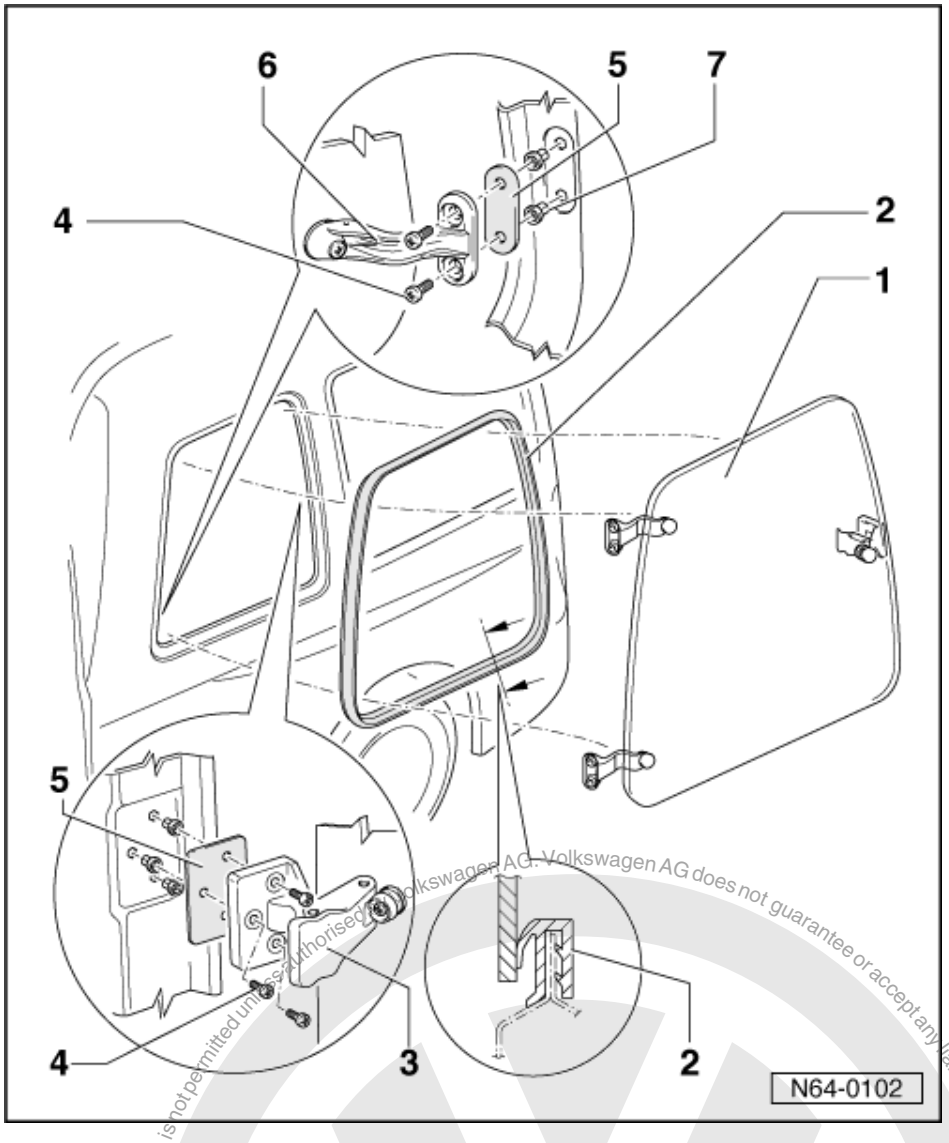

2.2 - Removing and installing side window (Caddy)

1 Side window
- Hinged
- Removing:
- Secure window against falling out (adhesive tape/second mechanic).
- Remove cross-head screws - 4 - (front qty. 4, rear qty. 3).

2 Gasket
- Fitted onto body flange

3 Latch linkage

4 Cross-head screw
- 4.5 Nm
- Insert with locking fluid D 000 600 A2

Protected by copyright. Copying for private or commercial purposes, in part or in whole, is not permitted unless authorised by Volkswagen AG. Volkswagen AG does not guarantee or accept any liability with respect to the correctness of information in this document. Copyright by Volkswagen AG.
satelettronica

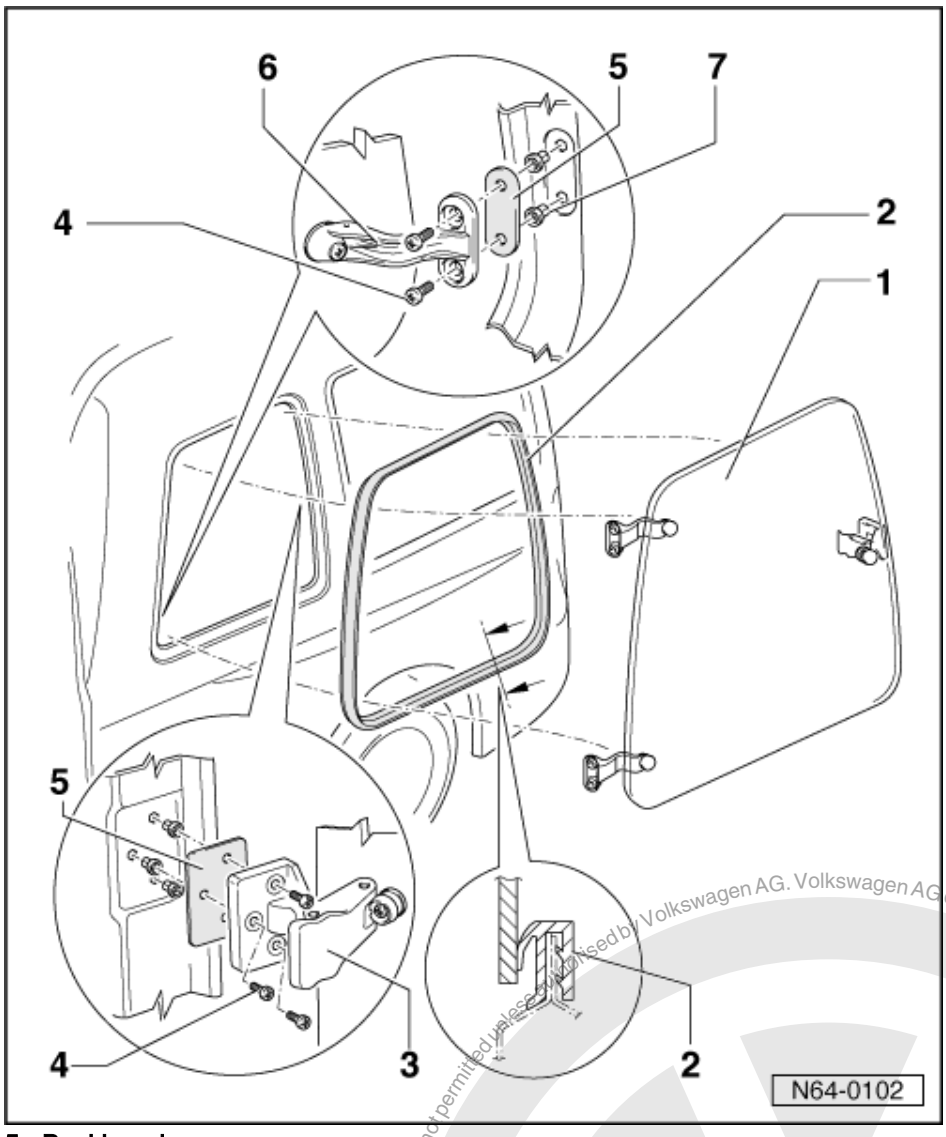

5 Backing piece
6 Hinge
7 Pop rivet nut

- Remove locking fluid from threads with a thread tap

Protected by copyright. Copying for private or commercial purposes, in part or in whole, is not permitted unless authorised by Volkswagen AG. Volkswagen AG does not guarantee or accept any liability with respect to the correctness of information in this document. Copyright by Volkswagen AG.
satelettronica

3 - Door windows

3.1 - Door windows

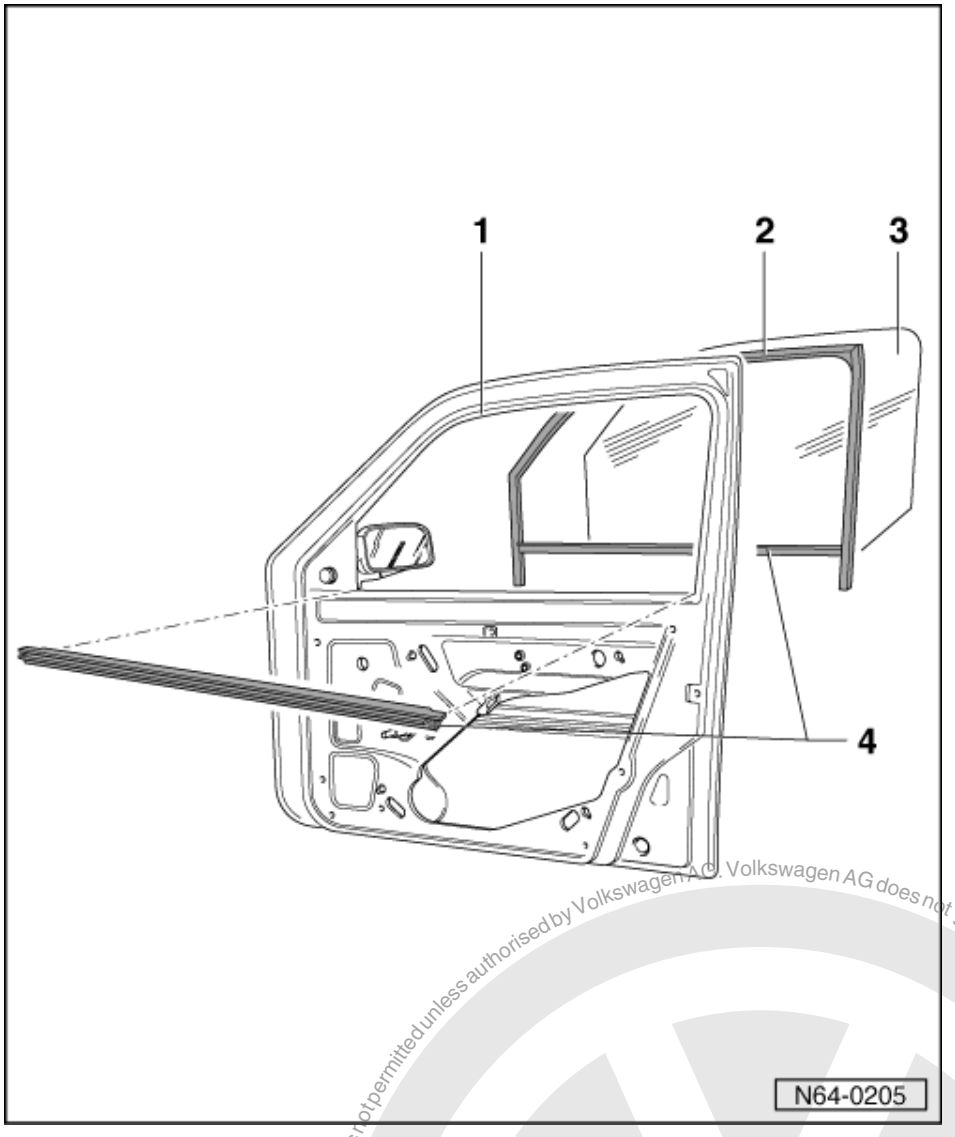

3.2 - Front door window - Assembly overview

1 Door
- Removing and installing => Page 25
- Adjusting => Page 26

2 Window channel
- Buttoned into window frame

3 Door window
- Removing =>Page 148
- Adjusting => Page 148

4 Window slot seal
- Pushed onto flange

Protected by copyright. Copying for private or commercial purposes, in part or in whole, is not permitted unless authorised by Volkswagen AG. Volkswagen AG does not guarantee or accept any liability with respect to the correctness of information in this document. Copyright by Volkswagen AG.
satelettronica

3.3 - Removing front door window

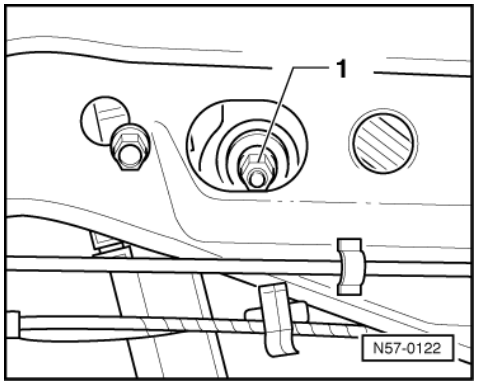

- Remove door trim and door insulation sheeting.

=> General body repairs, interior; Repair group 70; Door trim Door trim

- Pull window slot seal off flange.
- Crank door window upwards or downwards until clamping jaws are located in the installation openings.
- -> Unscrew hexagon nuts -1- and press clamping jaws apart.
- Pull door window upwards, tilt towards front and lift out of window slot.

3.4 - Adjusting front door window

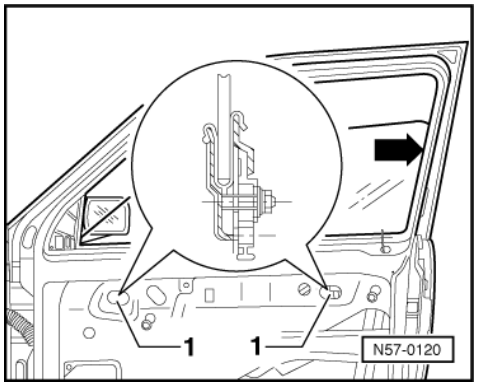

- Remove door trim and door insulation sheeting.

=> General body repairs, interior; Repair group 70; Door trim Door trim

- Crank door window upwards or downwards until clamping jaws are located in the installation openings.
- -> Loosen clamping jaws, push door window into window channel -arrow- and tighten clamping jaws with hexagon nuts -1- (10 Nm).

satelettronica
Protected by copyright. Copying for private or commercial purposes, in part or in whole, is not permitted unless authorised by Volkswagen AG. Volkswagen AG does not guarantee or accept any liability with respect to the correctness of information in this document. Copyright by Volkswagen AG.

3.5 - Removing and installing front window lifter

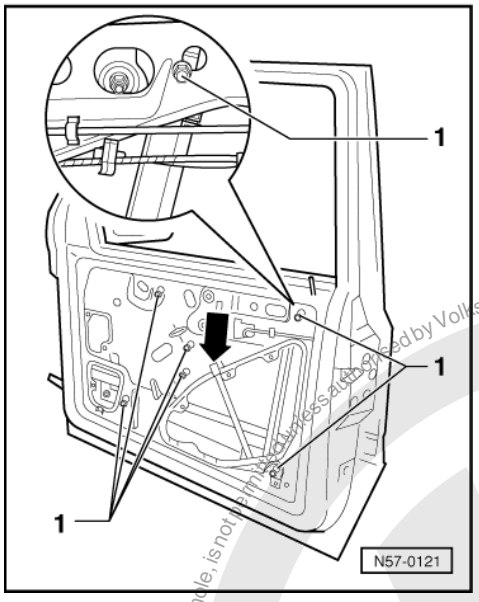

- Remove door window => Page 148 .
- -> Unclip clip -arrow- for bowden cables.
- Loosen bolts -1- (10 Nm).
- If electric window lifter fitted separate plug connection.
- Lift window lifter slightly so that bolts -1- can be pulled through installation openings.
- Pull window lifter out downwards through installation opening.

Protected by copyright. Copyright for private or commercial purposes, in part or in whole, is not permitted unless authorised by Volkswagen AG. Volkswagen AG does not guarantee or accept any liability with respect to the correctness of information in this document. Copyright by Volkswagen AG.
satelettronica

3.6 - Rear door window - Assembly overview

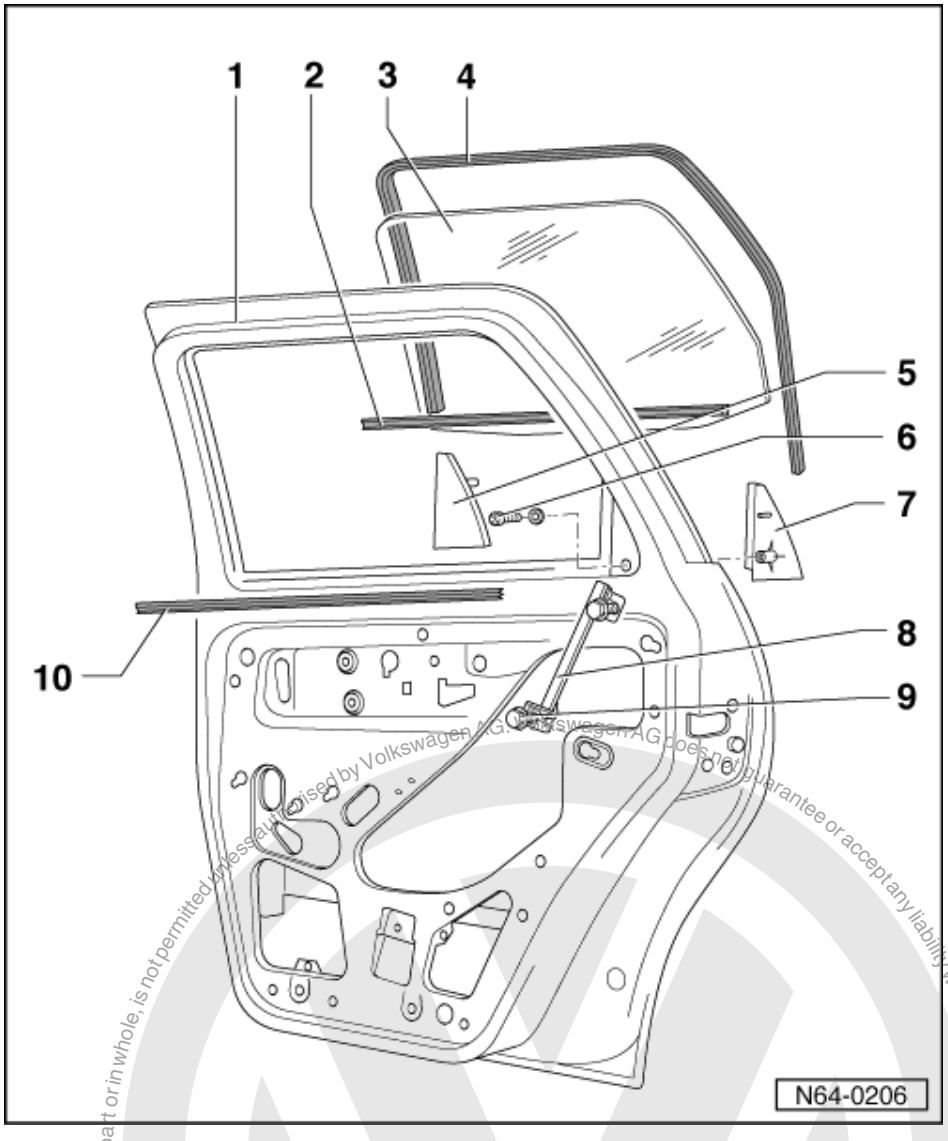

Note:

Illustration shows a Polo Classic. The Polo Estate door differs only slightly in the shape of the window.

1 Door
- Removing and installing => Page 25
- Adjusting =>Page 72

2 Window slot seal
- Pushed onto flange

3 Door window
- Removing for Polo Classic => Page 152
- Removing for Polo Estate => Page 153

4 Window guide
- Buttoned into window frame

Protected by copyright. Copyright by Volkswagen AG.
Copyright by Volkswagen AG. Does not guarantee or accept any liability with respect to the correctness of information in this document.
Commercial purposes, in part or in whole, is not permitted unless authorised by Volkswagen AG.
satelettronica

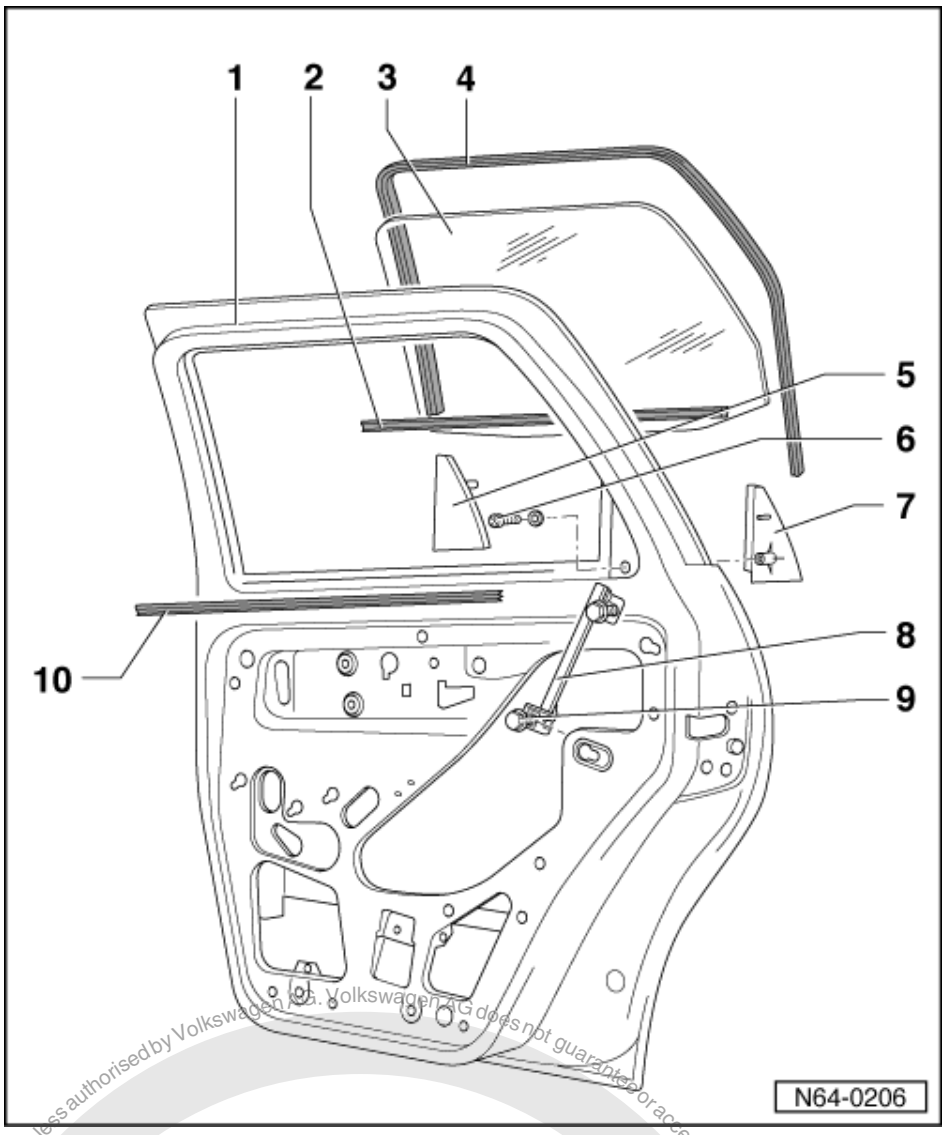

5 Cover
- Pull off of door frame (clipped in)

6 Bolt

7 Cover
- Polo Classic, screwed
- Polo Estate, pull off door frame (clipped in)

8 Window guide retainer
- Retains end of window guide - 4 -

9 Bolt
- 10 Nm
- Only loosened for removal of window guide retainer

10 Window slot seal
- Pushed onto flange

satelettronica
Protected by copyright. Copying for private or commercial purposes, in part or in whole, is not permitted unless authorised by Volkswagen AG. Volkswagen AG does not guarantee or accept any liability with respect to the correctness of information in this document. Copyright by Volkswagen AG.

3.7 - Removing and installing rear door window (Polo Classic)

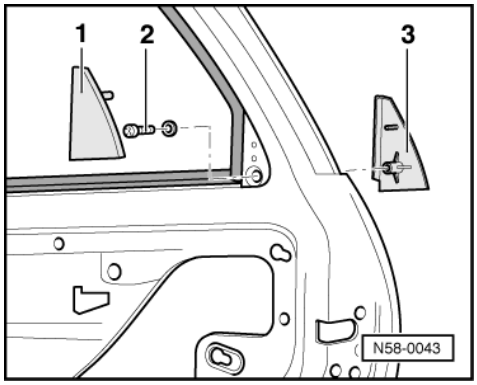

Door window must be closed.

- Remove door trim and door insulation sheeting.

=> General body repairs, interior; Repair group 70; Door trim Door trim

- -> Pull off inner cover -1-, remove bolt -2- and take off outer cover -3-.

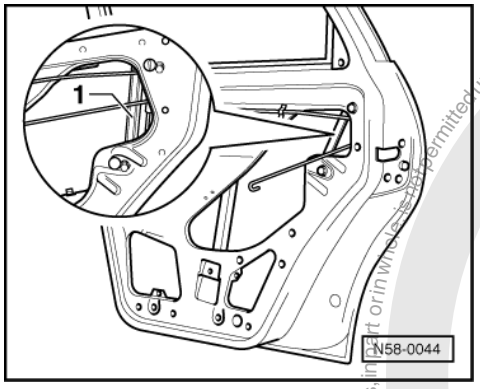

- -> Loosen window guide retainer -1- bolts, unhook from door and take out.

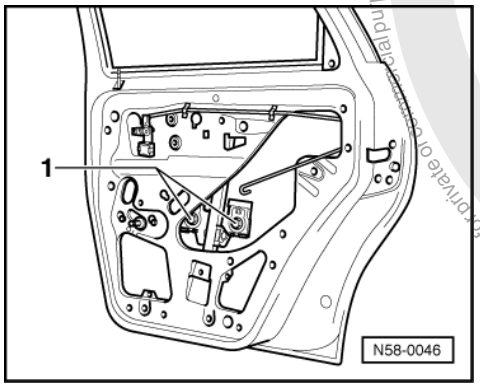

- Lower door window until clamping jaws are positioned in the installation openings.
- -> Unscrew hexagon nuts -1- and press clamping jaws apart.

Protected by copyright. Copying for private or commercial purposes, in part or in whole, is not permitted unless authorised by Volkswagen AG. Volkswagen AG does not guarantee or accept any liability with respect to the correctness of information in this document. Copyright by Volkswagen AG.
satelettronica

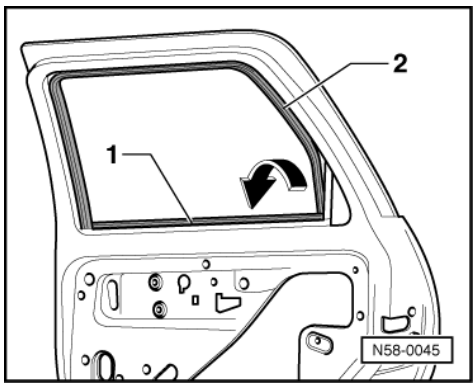

- -> Pull inner window slot seal -1- off flange.
- Pull rear of window guide -2- out from window frame, pull end out of window slot -arrow- and allow to lie on outside of door.
  .

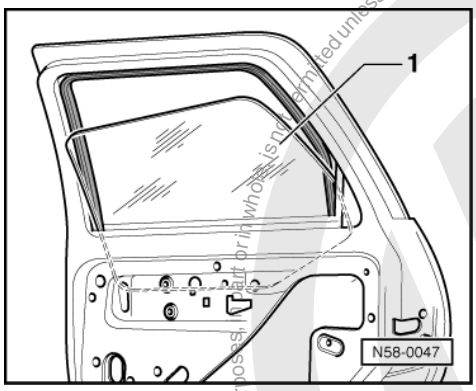

- -> Pull door window -1- upwards, tilt towards front and lift out of window slot.

3.8 - Removing and installing rear door window (Polo Estate)

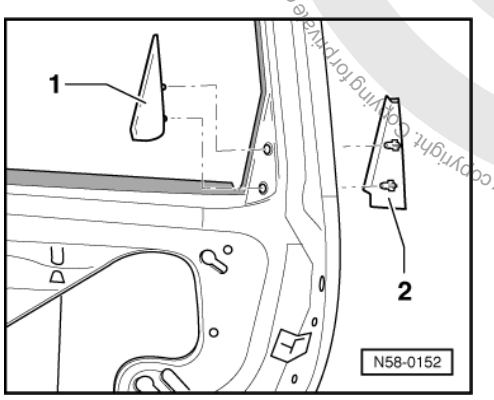

Door window must be closed.

- Remove door trim and door insulation sheeting.

=> General body repairs, interior; Repair group 70; Door trim Door trim

- -> Pull off inner -1- and outer -2- covers.

Protected by copyright. Copying for private or commercial purposes, in part or in whole, is not permitted unless authorised by Volkswagen AG. Volkswagen AG does not guarantee or accept any liability with respect to the correctness of information in this document. Copyright by Volkswagen AG.
satelettronica

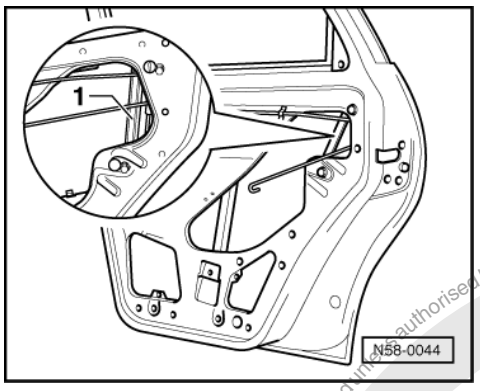

- -> Loosen window guide retainer -1- bolts, unhook from door and take out.

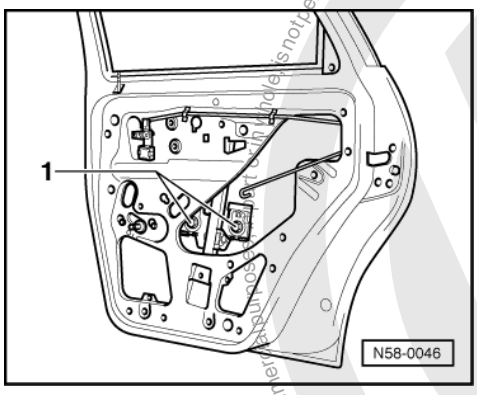

- Lower door window until clamping jaws are positioned in the installation openings.
- -> Unscrew hexagon nuts -1- and press clamping jaws apart.

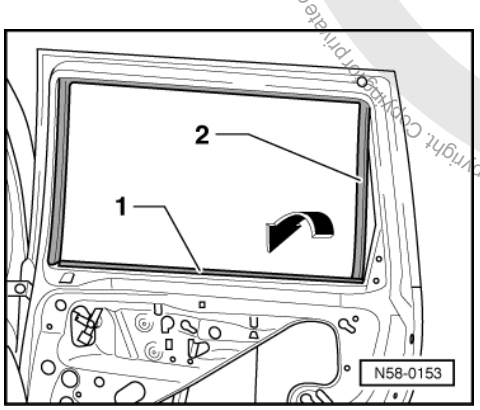

- -> Pull inner -1- and outer window slot seals off flange.
- Pull rear of window guide -2- out from window frame, pull end out of window slot -arrow- and allow to lie on outside of door.

.

Protected by copyright. Copyright by Volkswagen AG.
Copyright by Volkswagen AG. Volkswagen AG does not guarantee or accept any liability with respect to the correctness of information in this document. Copying for private or commercial purposes, in part or in entirety, is not permitted unless authorised by Volkswagen AG.
satelettronica

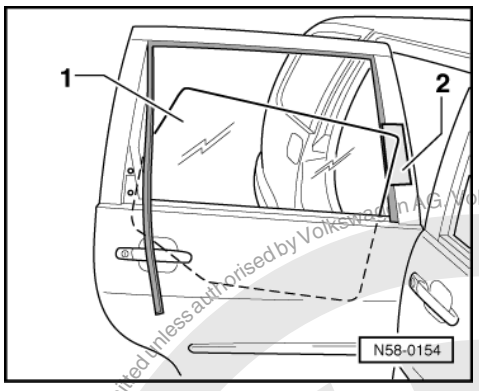

- -> Mask window frame with textile reinforced adhesive tape -2- to prevent damage to paintwork.
- Pull door window -1- upwards, tilt forwards and lift out of window slot.

3.9 - Removing rear window lifters

Removing

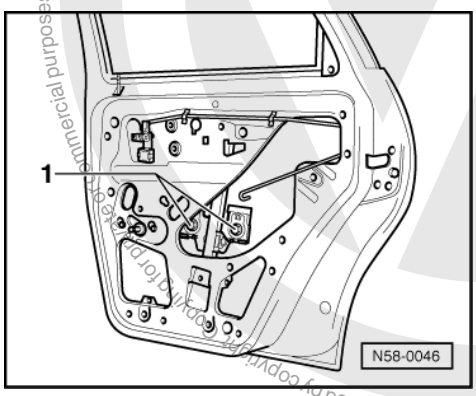

- Remove door trim and door insulation sheeting.

=> General body repairs, interior; Repair group 70; Door trim Door trim

- Crank door window downwards until clamping jaws are located in the installation openings.
- -> Unscrew hexagon nuts -1- and press clamping jaws apart.
- Push door window up and fix in position (e.g. with adhesive tape).

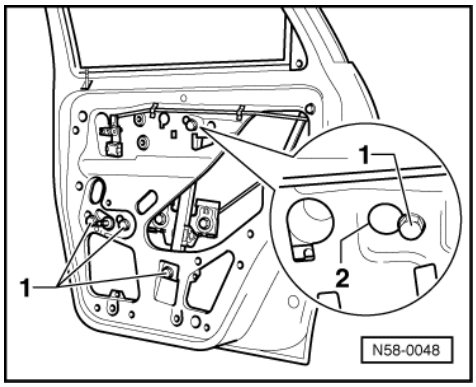

- -> Loosen bolts -1- (10 Nm).
- If electric window lifter fitted separate plug connection.
- Lift window lifter slightly so that the bolts -1- can be pulled through installation openings -2-.
- Take window lifter out through installation opening.

satelettronica

66 - Exterior equipment

1 - Roof moulding

1.1 - Roof moulding

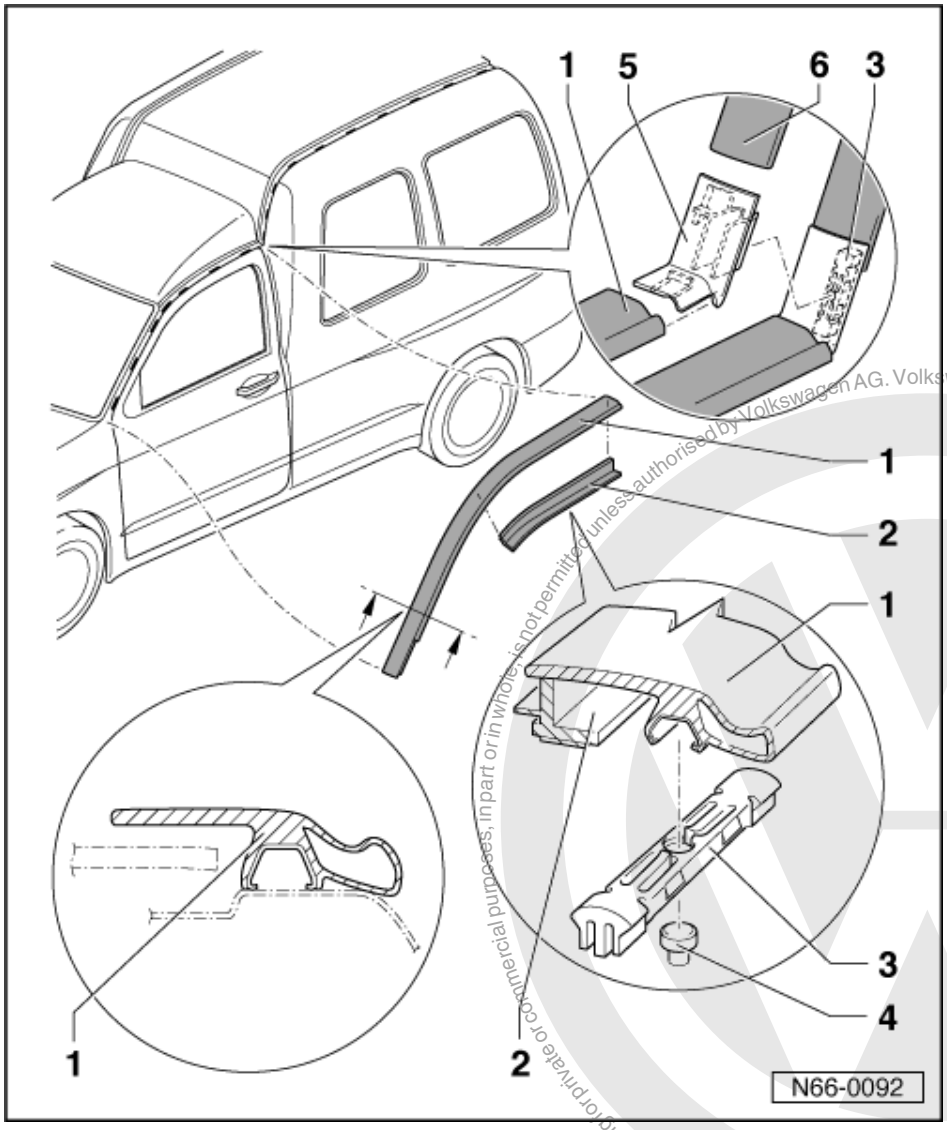

1.2 - Removing and installing roof moulding (Caddy)

Front roof moulding

Removing

- Lever front roof moulding -1- off securing clips -3- with a plastic wedge.
- Pull angled moulding -5- off rear roof moulding -6- and unclip.

satelettronica
Protected by copyright. Copying for private or commercial purposes, in part or in whole is not permitted unless authorised by Volkswagen AG. Volkswagen AG does not guarantee or accept any liability with respect to the correctness of information in this document. Copyright by Volkswagen AG.

- To dismantle, heat profile -2- with a hot air blower (V.A.G 1416) and pull off roof.

Installing

- Clean surface for adhesive profile -2- on outer panel with petrol, then treat with silicone remover and rub dry.

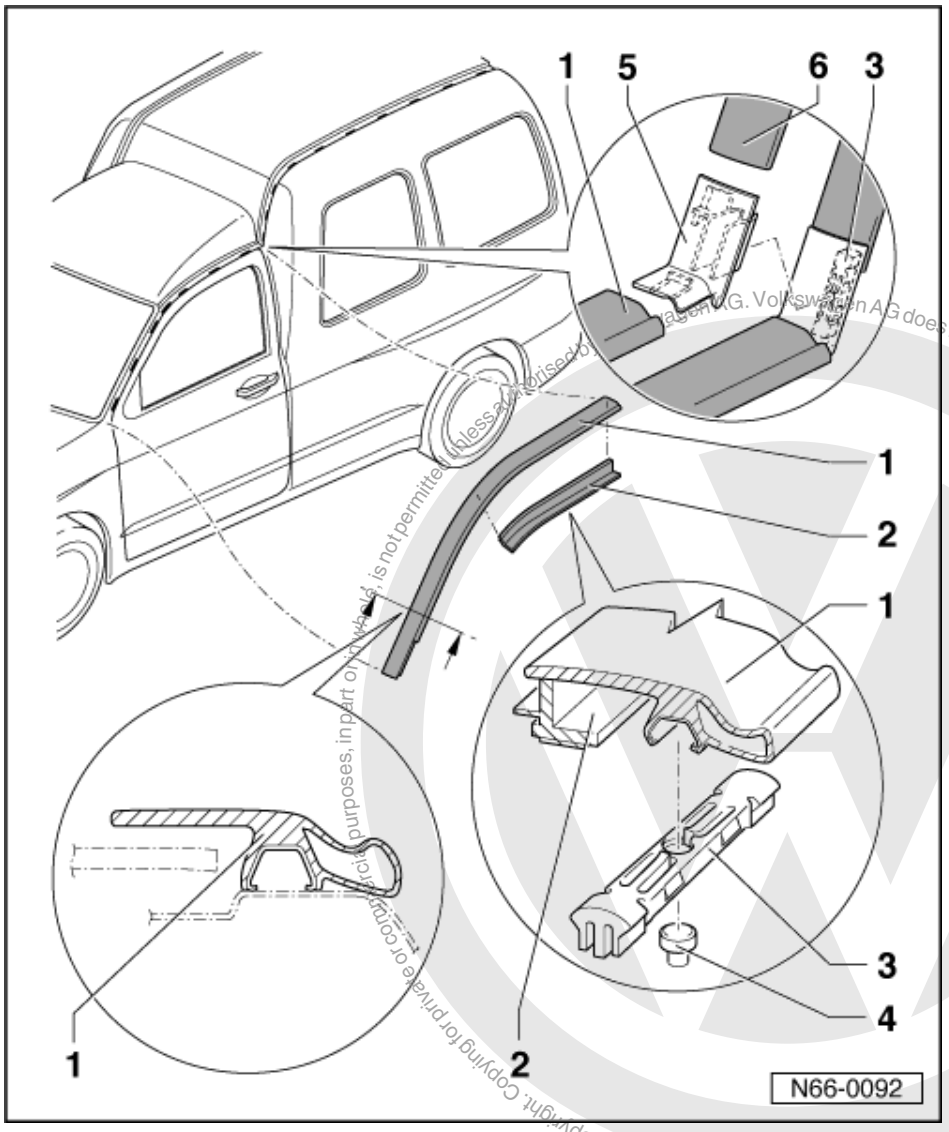

- Pull off protective foil, align profile -2-, attach and press forcefully on. The temperature of the outer panel and the profile should be approx. 40 °C.
- Renew securing clips -3- (squeeze securing clips together with pliers and remove from T studs -3-).
- Push angled moulding -5- onto rear moulding -6- and clip in.
- Slide roof moulding onto angled moulding -5- and insert front end between wing and bonnet.
- Position roof moulding and press on to securing clips with palms of hands.

satelettronica

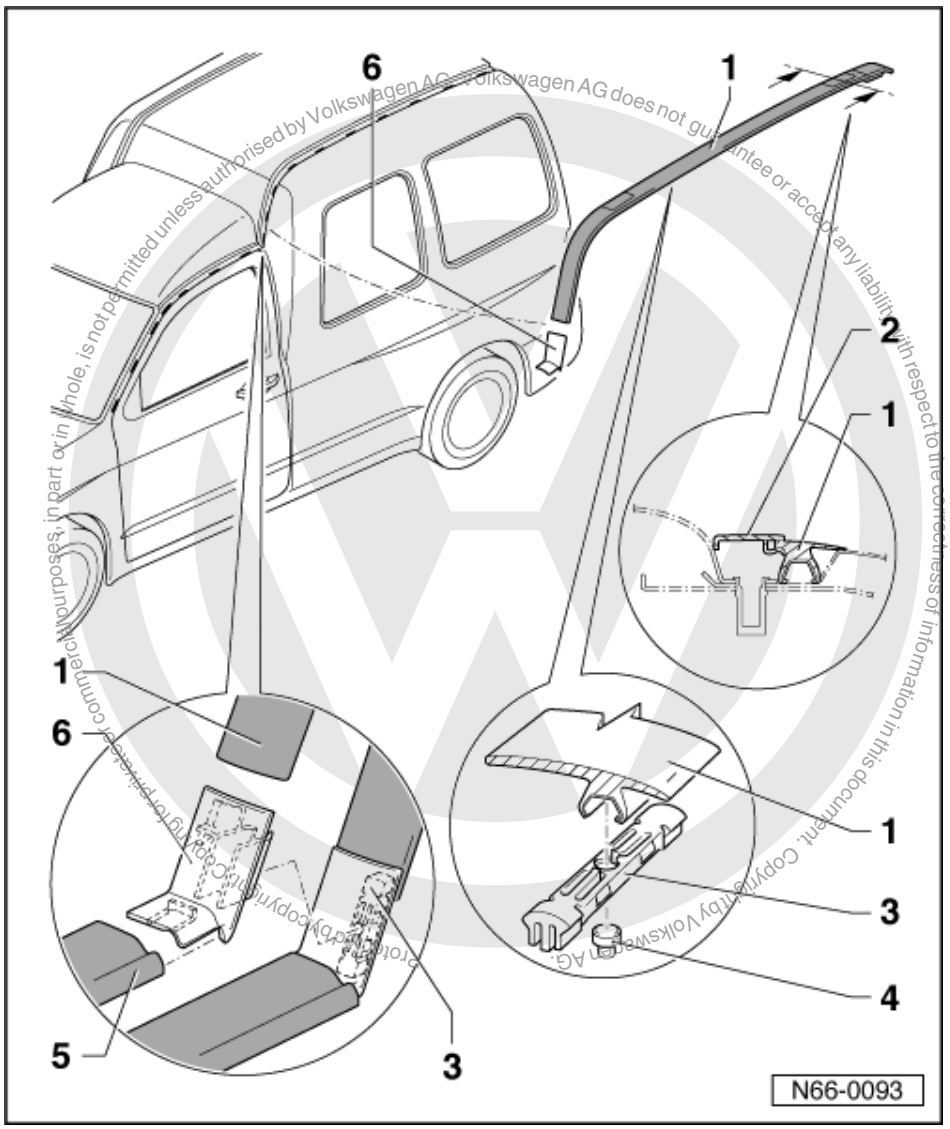

Commercial purposes, in part or in whole, is not permitted unless authorised by Volkswagen AG. Volkswagen AG does not guarantee or accept any liability with respect to the correctness of information in this document. Copyright by Volkswagen AG.

satelettronica

Rear roof moulding

Removing

- Lever roof moulding -1- off securing clips -3- with a plastic wedge starting at rear.
- Pull rear roof strip -1- off angled moulding -6-.

Installing

- Renew securing clips -3- (squeeze securing clips together with pliers and remove from T studs -4-).
- Slide end of rear roof moulding -1- into angled moulding -6- which is on end of front roof moulding -5-.
- Position roof moulding and press on to securing clips with palms of hands.

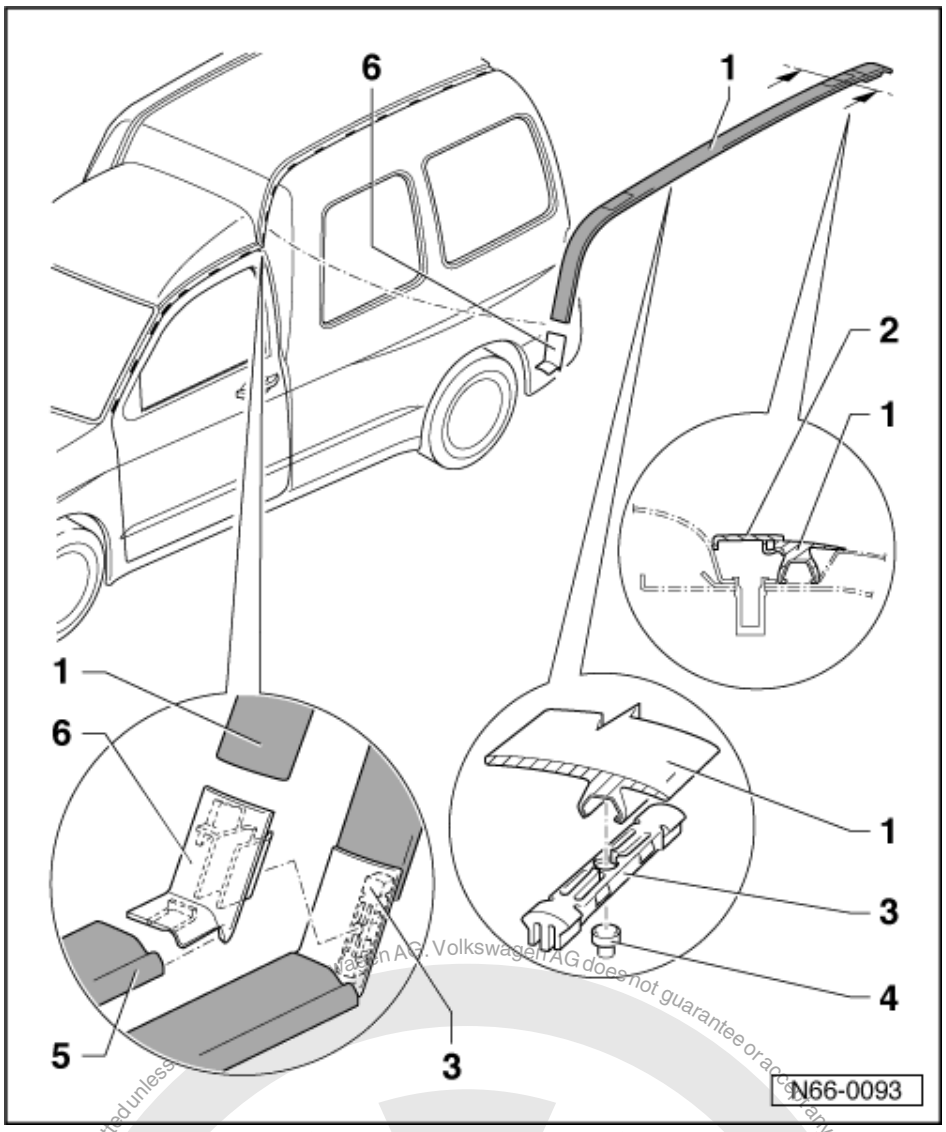

- Clip in cover caps -2- for roof load carrier if necessary.

Note:

When reusing the roof moulding, the retaining strip in the roof moulding may also require squeezing together.

Inner dimension of retaining strip = 8.6 mm.

Protected by copyright. Copying for private or commercial purposes, in part or in whole, is not permitted unless Volkswagen AG. Volkswagen AG does not guarantee or accept any liability with respect to the correctness of information in this document. Copyright by Volkswagen AG.
satelettronica

1.3 - Removing and installing roof moulding (Polo Classic, Polo Estate)

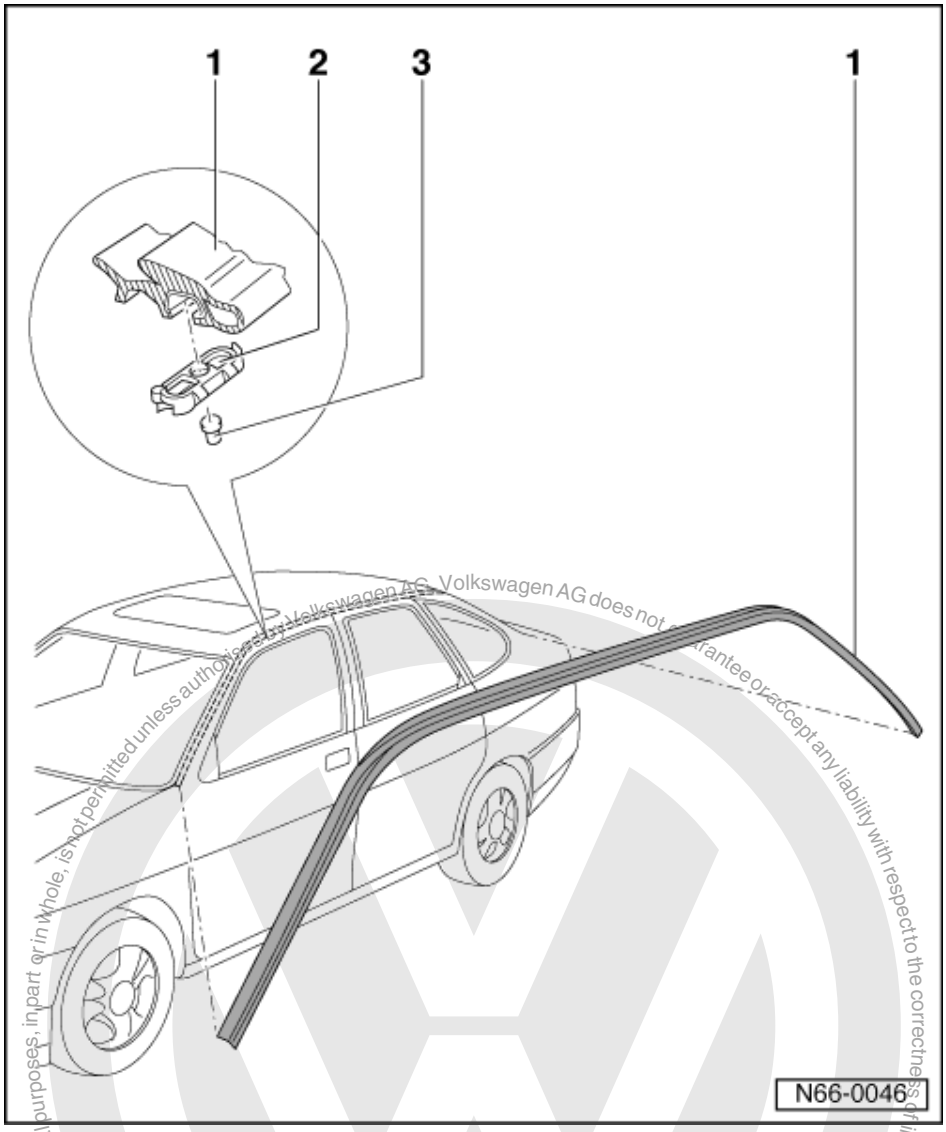

Note:

Illustration shows a Polo Classic, for Polo Estate with roof railing => Page 162 .

Removing

- Lever roof moulding -1- off securing clips -2- with a plastic wedge.

Installing

- Renew securing clips -2- (squeeze securing clips together with pliers and remove from T studs -3-).
- Position roof moulding and press on to securing clips with palms of hands.

Copyright by Volkswagen AG. Volkswagen AG does not guarantee or accept any liability with respect to the correctness of information in this document. Copying for private or commercial purposes, in part or in whole, is not permitted unless authorised by Volkswagen AG. Protected by copyright. Copyright by Volkswagen AG.
satelettronica

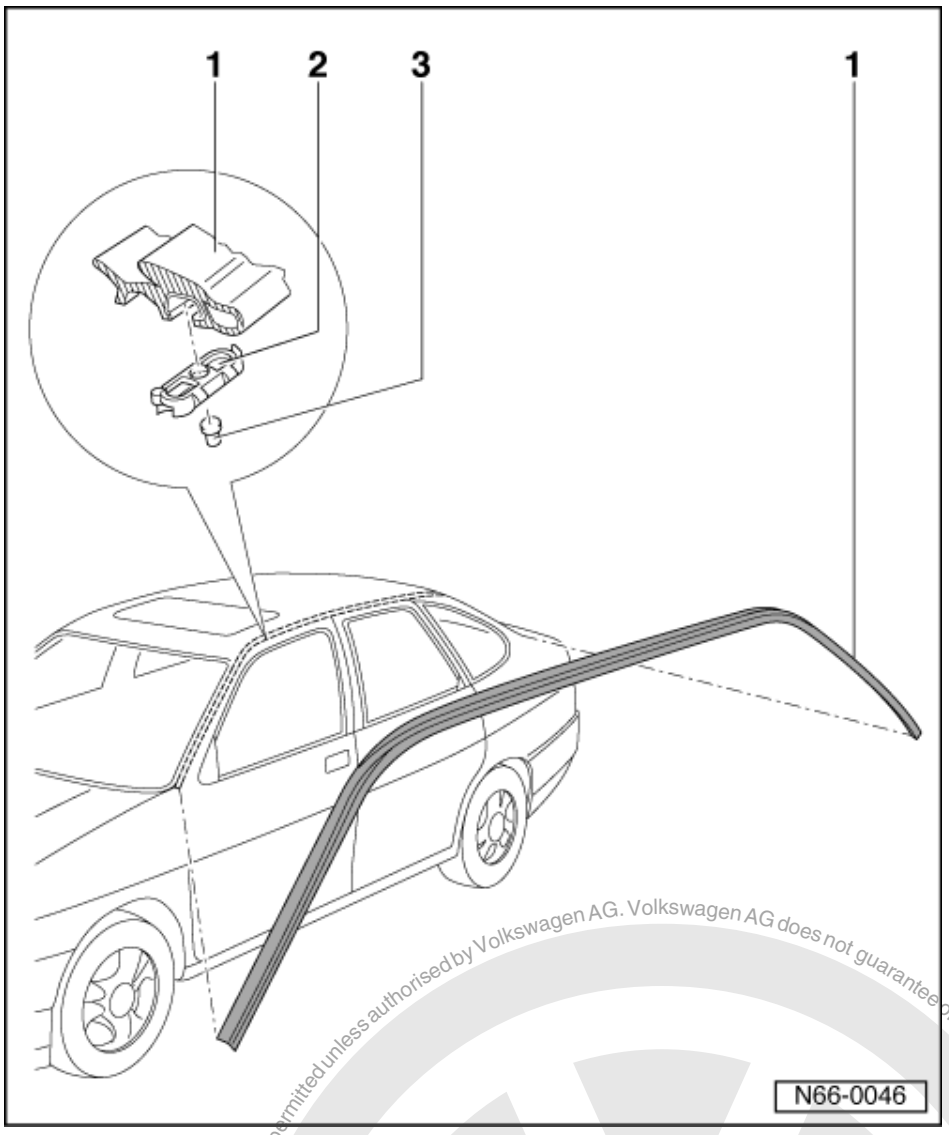

Note:

When reusing the roof moulding, the retaining strip in the roof moulding must also be squeezed together.

Inner dimension of retaining strip = 8.6 mm.

Protected by copyright. Copying for private or commercial purposes, in part or in whole, is not permitted unless authorised by Volkswagen AG. Volkswagen AG does not guarantee or accept any liability with respect to the correctness of information in this document. Copyright by Volkswagen AG.

satelettronica

2 - Roof railing

2.1 - Roof railing

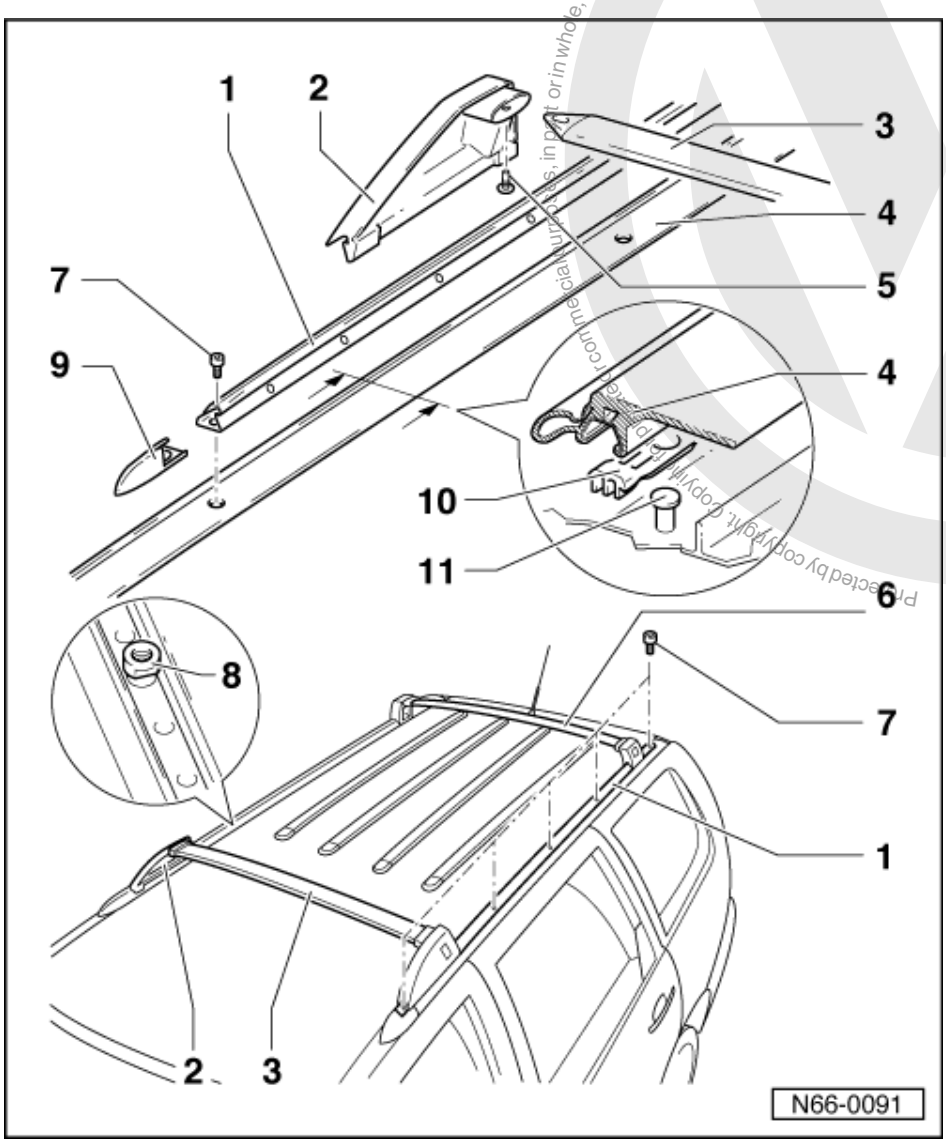

2.2 - Removing and installing roof railing

Note:

It is not intended that the roof railing be retrofitted.

1 Roof railing

- Removing:
- Slide out cover for hexagon key head bolt holes in roof railing (cover for front three holes to rear, cover for rear two holes to front).
- Remove socket head bolts - 7 - and cross-head screws - 5 -.
- Pull off end caps - 9 - and pull out both slides from roof railing - 1 - with buttons depressed. When doing this ensure that the cross piece - 3 - does not fall on roof.

Protected by copyright. Copyright by Volkswagen AG. Volkswagen AG does not guarantee or accept any liability with respect to the correctness of information in this document. Copyright by Volkswagen AG.
satelettronica

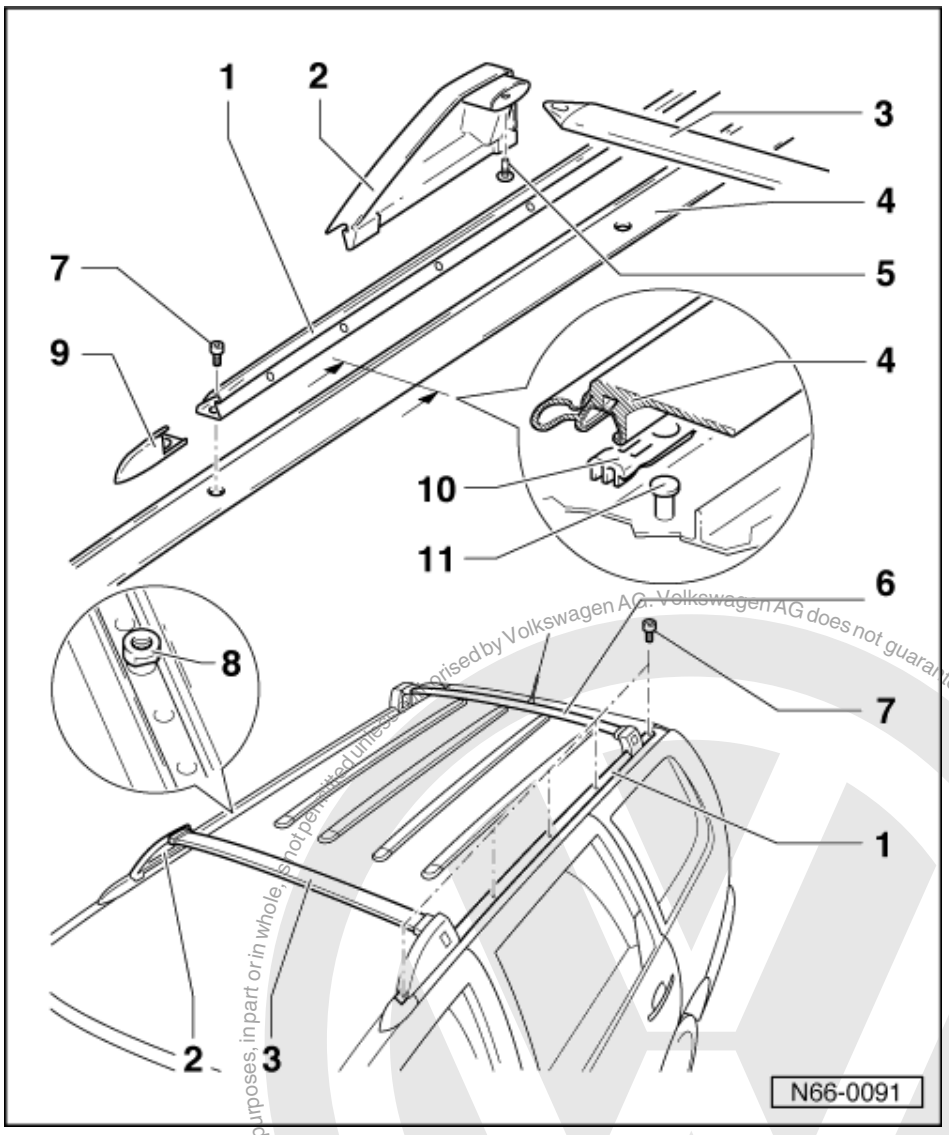

2 Slide

- Removing:
- Remove socket head bolts - 7 - and cross-head screws - 5 -.
- Pull off end caps - 9 - and both slides of roof railing - 1 - with buttons depressed (second mechanic). When doing this ensure that the cross piece - 3 - does not fall on roof.

3 Front cross piece

- When installing observe installation position which is marked on underside.

4 Roof moulding

- Remove roof railing - 1 - before removing
- Removing and installing => Page 160

Protected by copyright. Copying for private or commercial purposes, in part or in whole, is not permitted unless authorised by Volkswagen AG. Volkswagen AG does not guarantee or accept any liability with respect to the correctness of information in this document. Copyright by Volkswagen AG.
satelettronica

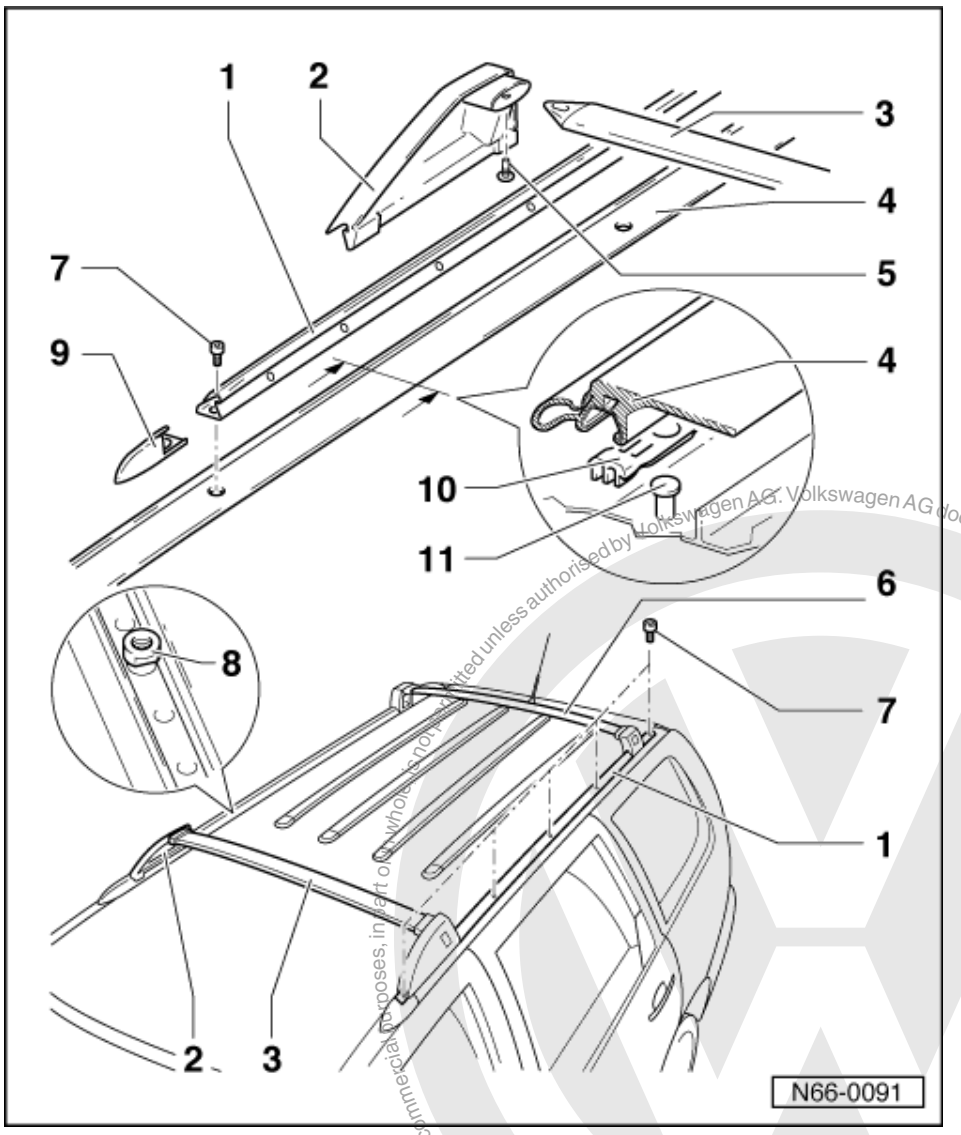

5 Cross-head screw
- 3.5 Nm

6 Rear cross piece
- When installing observe installation position which is marked on underside.

7 Hexagon socket head screw
- 5.5 Nm

8 T stud with thread

9 End cap

10 Clip

11 T stud

Protected by copyright. Copyright by Volkswagen AG.
Copyright by Volkswagen AG. Volkswagen AG does not guarantee or accept any liability with respect to the correctness of information in this document.
Protected by copyright. Copyright for private or commercial purposes, in part or in whole is not permitted unless authorised by Volkswagen AG.
satelettronica

3 - Trim

3.1 - Trim

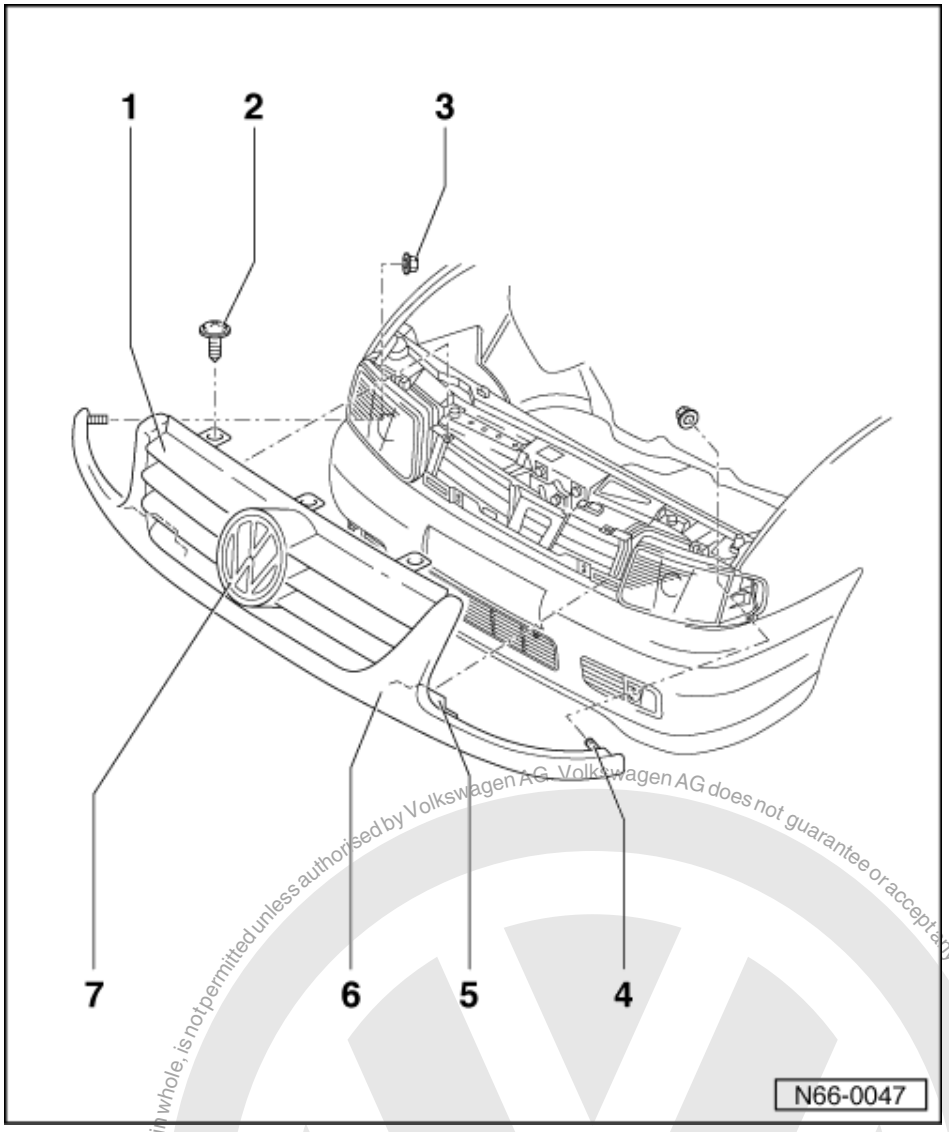

3.2 - Removing and installing radiator grille with trim frame

1 Radiator grille
- Material: ASA

2 Cross-head screw

3 Shouldered hexagon nut

4 Stud
- Inserted into trim frame

5 Locking lug

6 Trim frame
- Remove together with radiator grille => Page 166
- In body-colour

7 VW emblem

Protected by copyright. Copying for private or commercial purposes, in part or in whole, is not permitted unless authorised by Volkswagen AG. Volkswagen AG does not guarantee or accept any liability with respect to the correctness of information in this document. Copyright by Volkswagen AG.
satelettronica

- Clipped into radiator grille

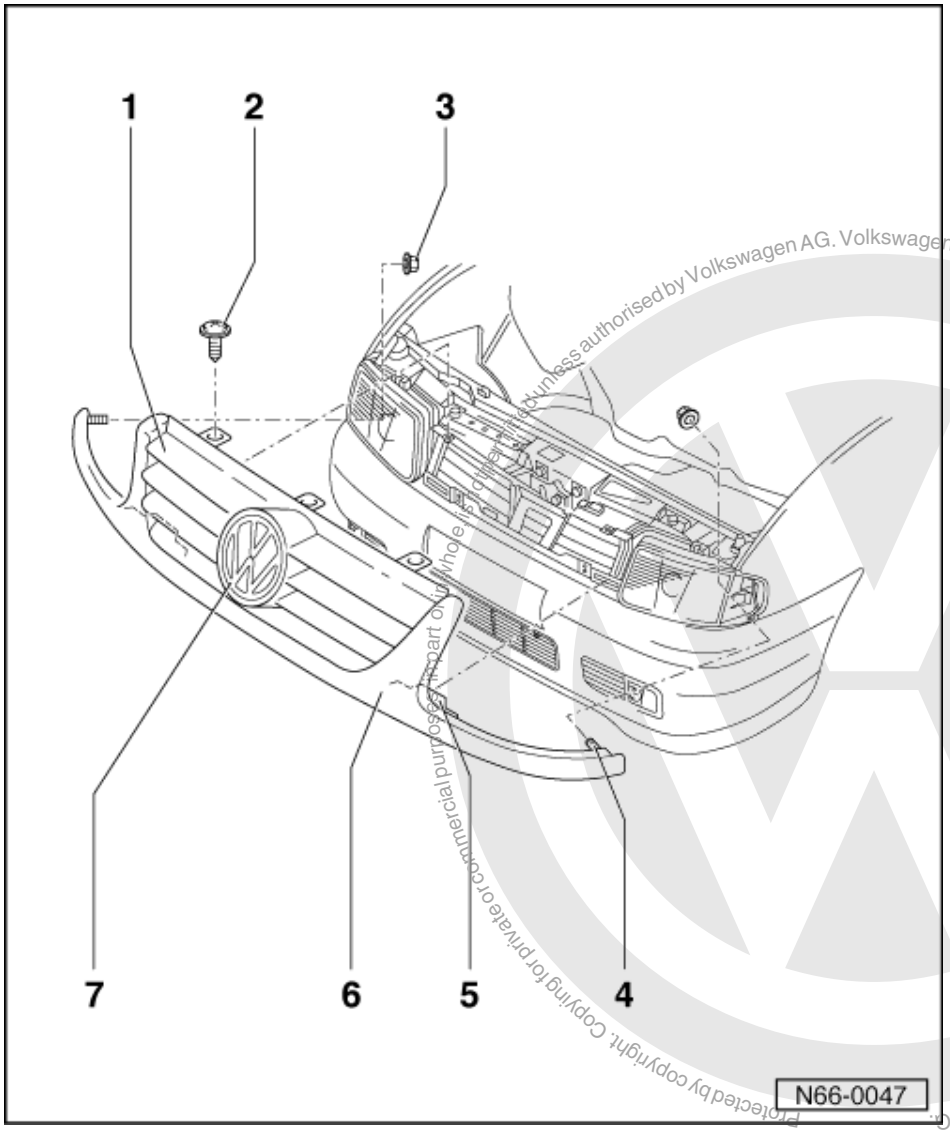

Protected by copyright. Copying for private or commercial purposes, in part or in whole, is not permitted unless authorised by Volkswagen AG. Volkswagen AG does not guarantee or accept any liability with respect to the correctness of information in this document. Copyright by Volkswagen AG.

satelettronica

Removing

- Turn signals removed.

=> Electrical system; Repair group 94; Front turn signals Front turn signals

- Remove cross-head screws - 2 - and shouldered hexagon nut - 3 -.
- Pull radiator grille with trim frame off.

Note:

Release locking lugs - 5 - with a screwdriver if necessary.

3.3 - Removing and installing plenum chamber cover

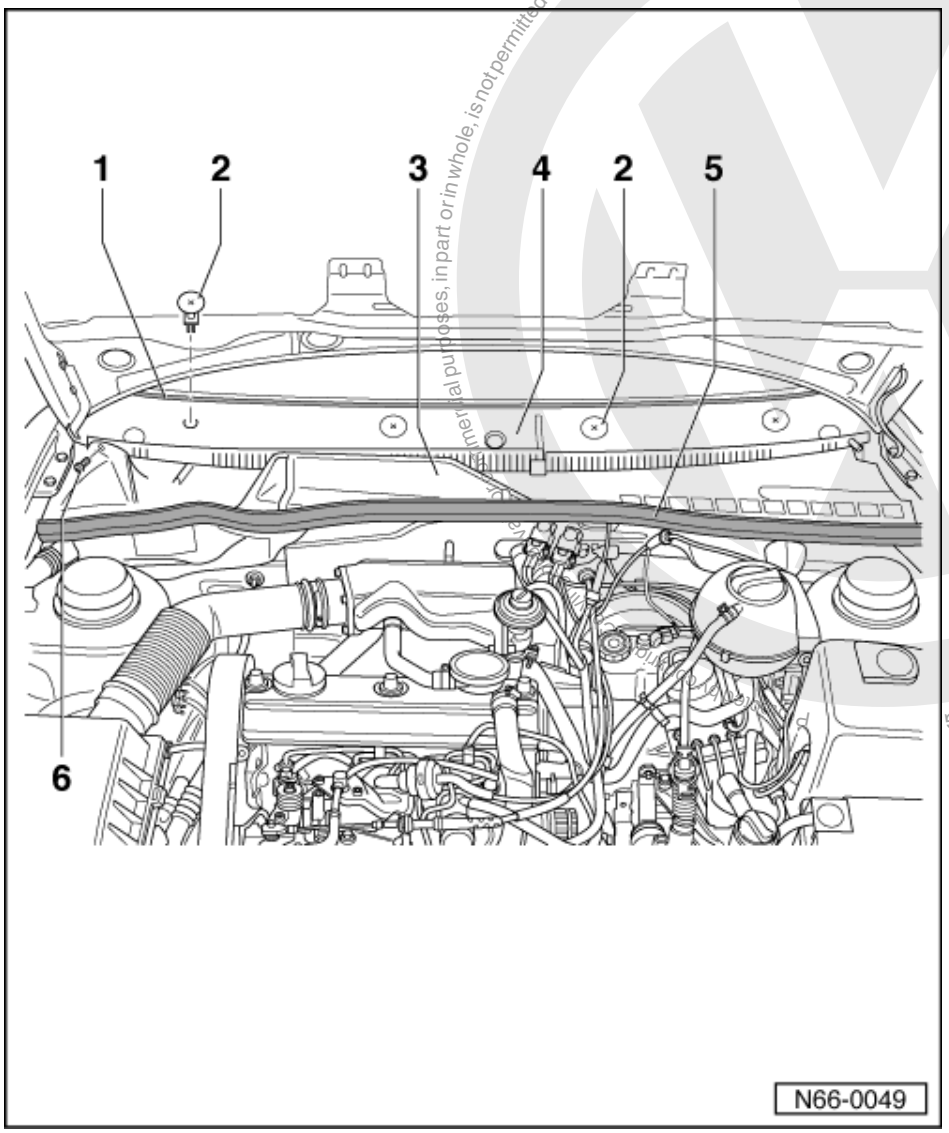

1 Gasket
- Bonded onto windscreen

2 Spreader clip
- Two-piece

3 Cover lower part
- Removing:
- Remove cover upper part - 4 -.
- Pull plenum chamber seal - 5 - off flange.

satelettronica

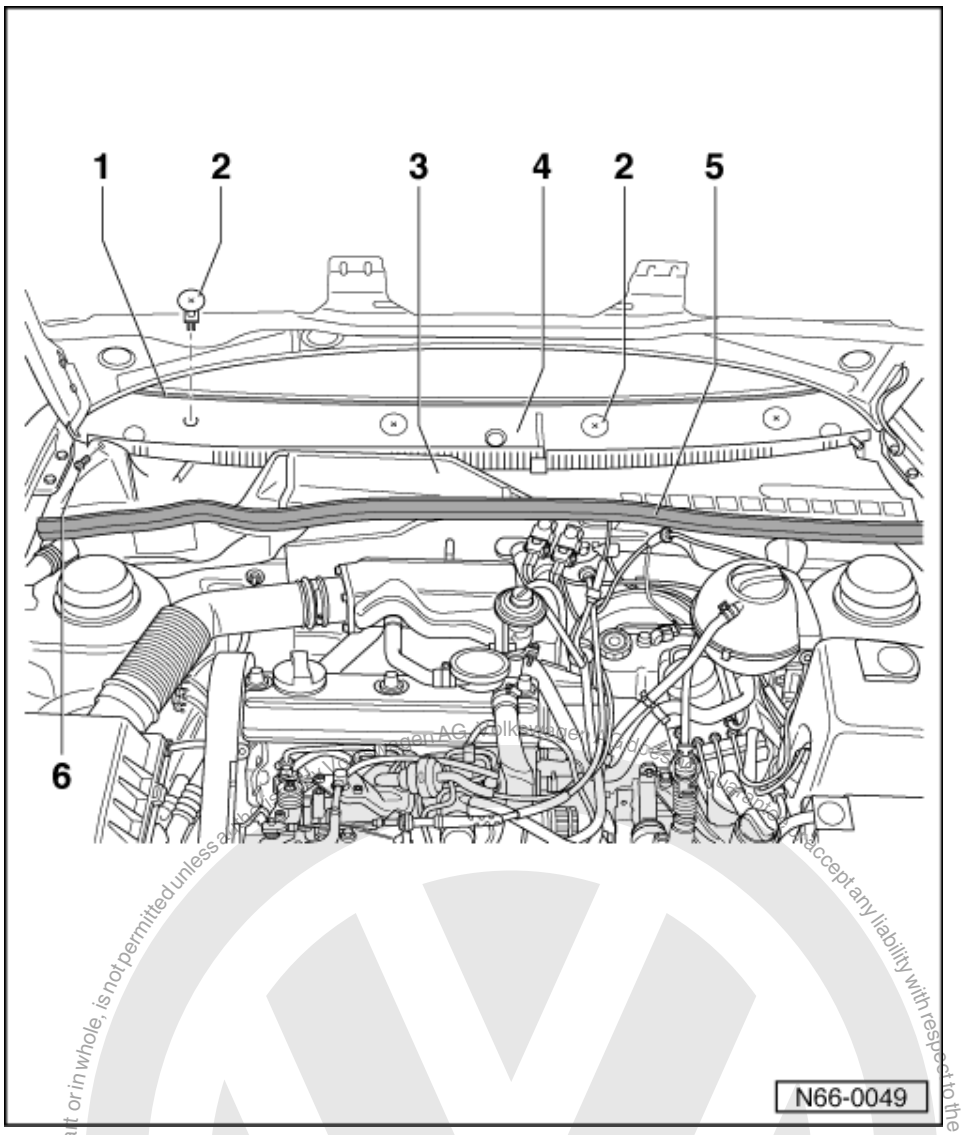

4 Cover upper part
- Two-piece
- Removing:
- Remove windscreen wiper.
- Unscrew spreader clip pin - 2 - several turns and pull out spreader clip.
- Remove cross-head screw - 6 -.
- Take off cover.

5 Plenum chamber seal
- Pushed onto flange

6 Cross-head screw

satelettronica

3.4 - Removing and installing underbody cover (Polo Classic)

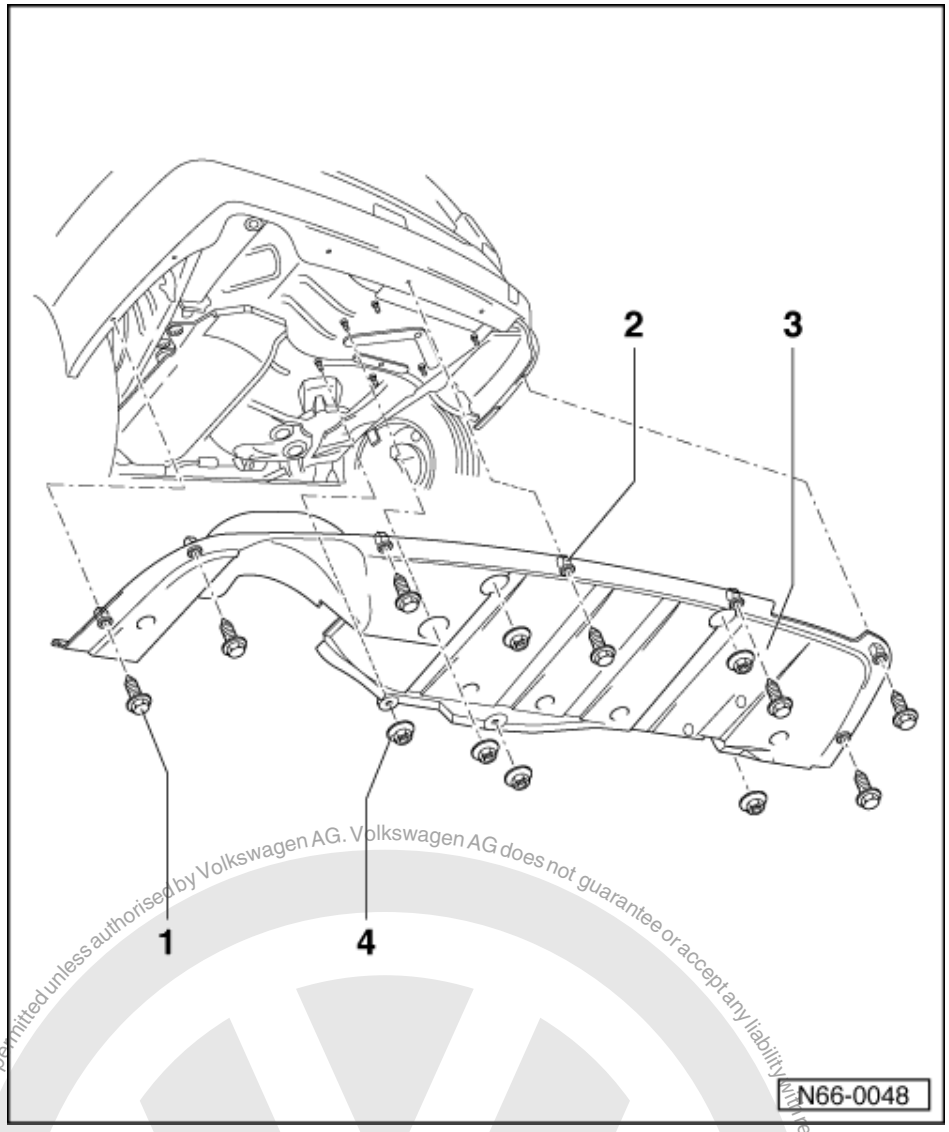

1 Combi screws
- 1.5 Nm

2 Spreader nut

3 Trim
- Connect to bumper using spreader nuts - 2 - and combi-screws - 1 -

4 Shouldered hexagon nut
- Fitted onto studs on body

Protected by copyright. Copyright for private or commercial purposes, in part or in whole, is not permitted unless authorised by Volkswagen AG. Volkswagen AG does not guarantee or accept any liability with respect to the correctness of information in this document. Copyright by Volkswagen AG.
satelettronica

4 - Wheel housing liner

4.1 - Wheel housing liner

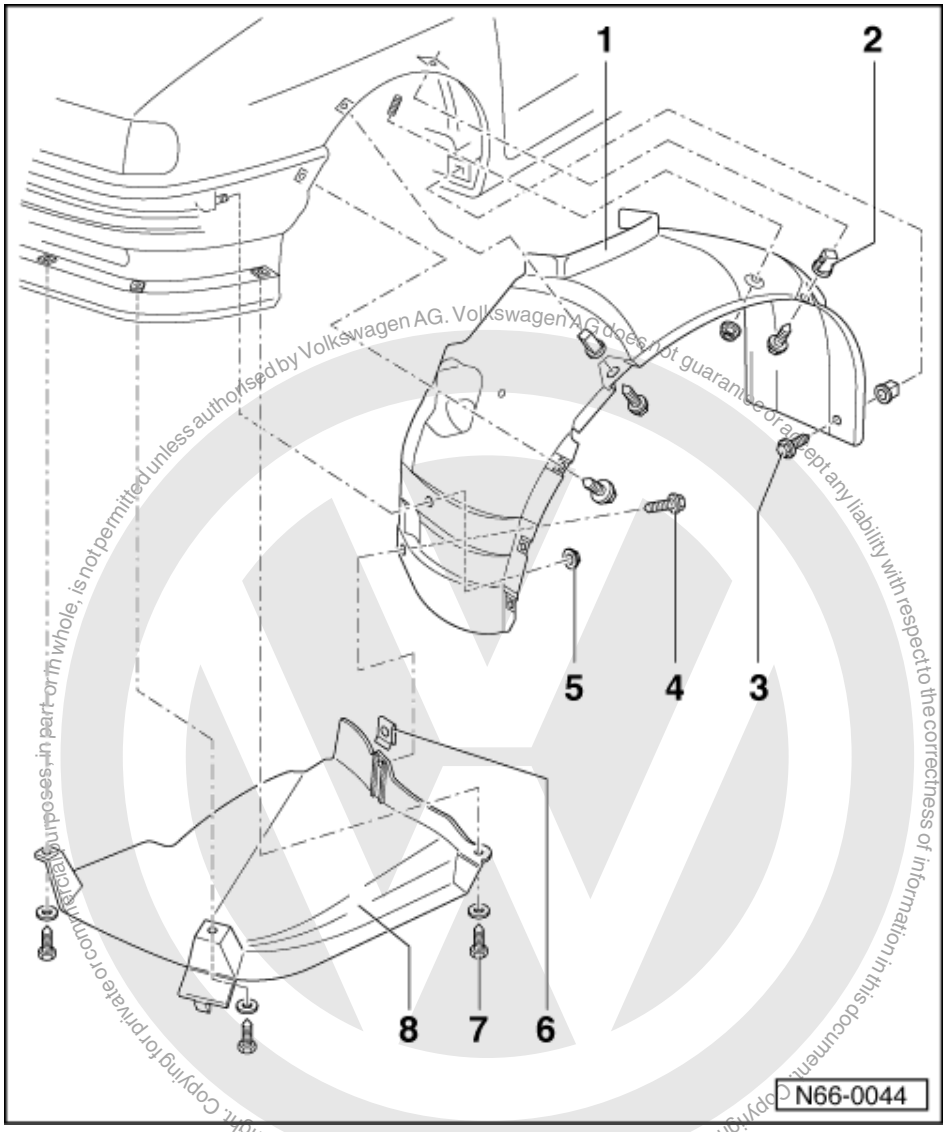

Protected by copyright. Copying for private or commercial purposes, in part or in whole, is not permitted unless authorised by Volkswagen AG. Volkswagen AG does not guarantee or accept any liability with respect to the correctness of information in this document. Copyright by Volkswagen AG.

4.2 - Removing and installing front wheel housing liner

- Remove wheel. Tightening torque for wheel bolts = 110 Nm.
- Remove combi-screw -4-.
- Remove combi-screws -3- from spreader nuts -2- or front bumper.
- Remove hexagon nuts -5.
- Pull wheel housing liner -1- out of wheel housing.

satelettronica

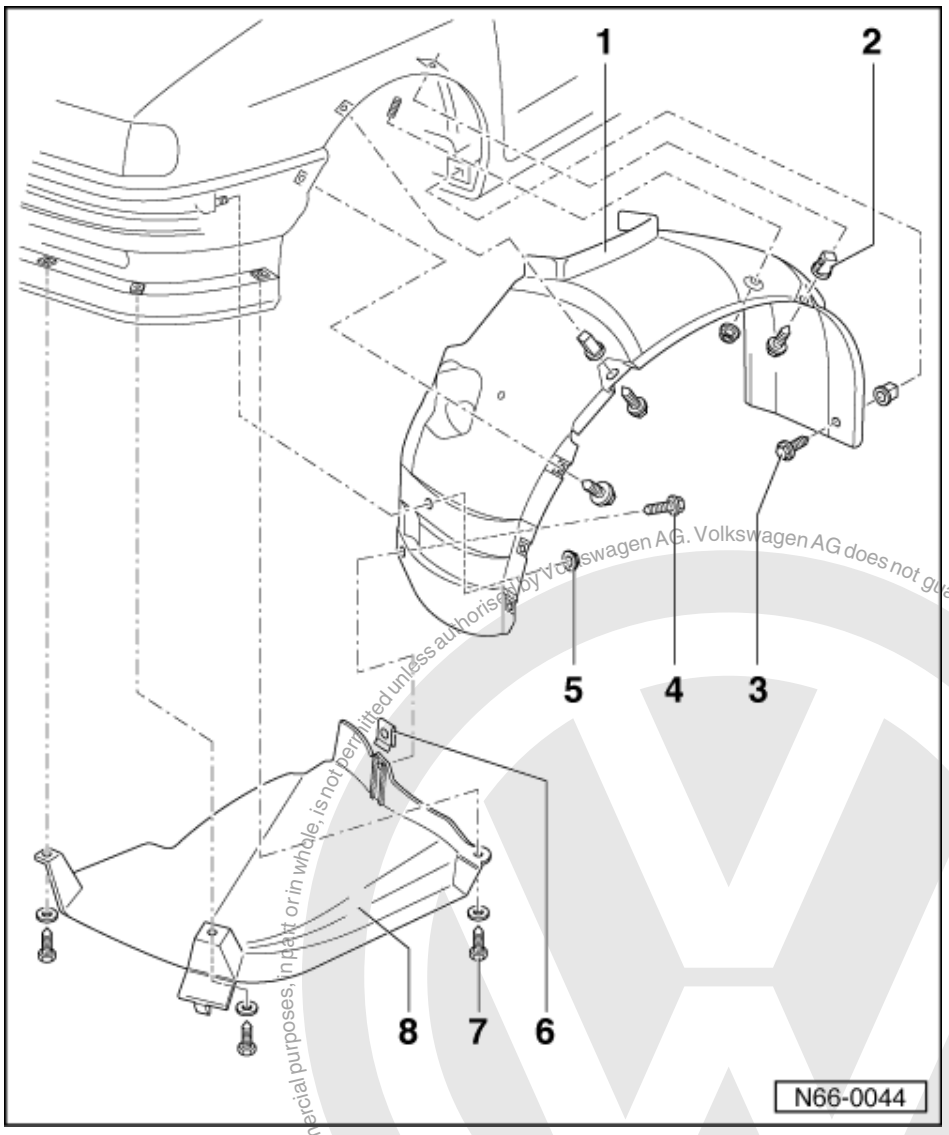

Protected by copyright. Copying for private or commercial purposes, in part or in whole, is not permitted unless authorised by Volkswagen AG. Volkswagen AG does not guarantee or accept any liability with respect to the correctness of information in this document. Copyright by Volkswagen AG.

satelettronica

Removing air guide

- Remove combi-bolt -4- if wheel housing liner has not been removed.
- Remove hexagon bolts -7- from bumper.
- Unhook front of air guide -8-.

4.3 - Removing and installing rear wheel housing liner (Polo Classic, Polo Estate)

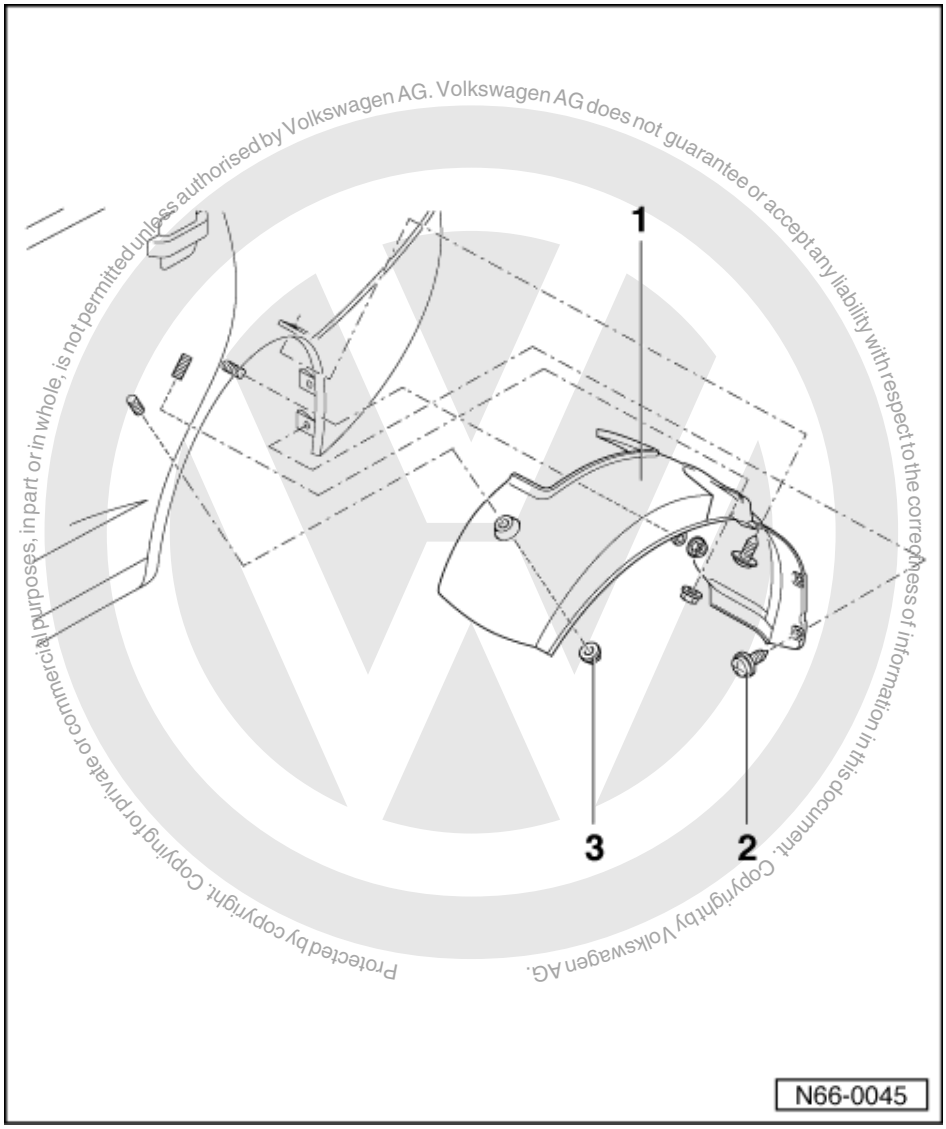

Protected by copyright. Copying for private or commercial purposes, in part or in whole, is not permitted unless authorised by Volkswagen AG. Volkswagen AG does not guarantee or accept any liability with respect to the correctness of information in this document. Copyright by Volkswagen AG.

satelettronica

Note:

Illustrated is the left-hand side of a Polo Classic. Removing the right-hand side or Polo Estate items is in principle the same. Securing points are different.

- Remove wheel. Tightening torque for wheel bolts = 110 Nm.
- Remove combi-screws -2- from rear bumper.
- Remove hexagon nuts -3.
- Pull wheel housing liner -1- out of wheel housing.

5 - Protective strips

5.1 - Protective strips

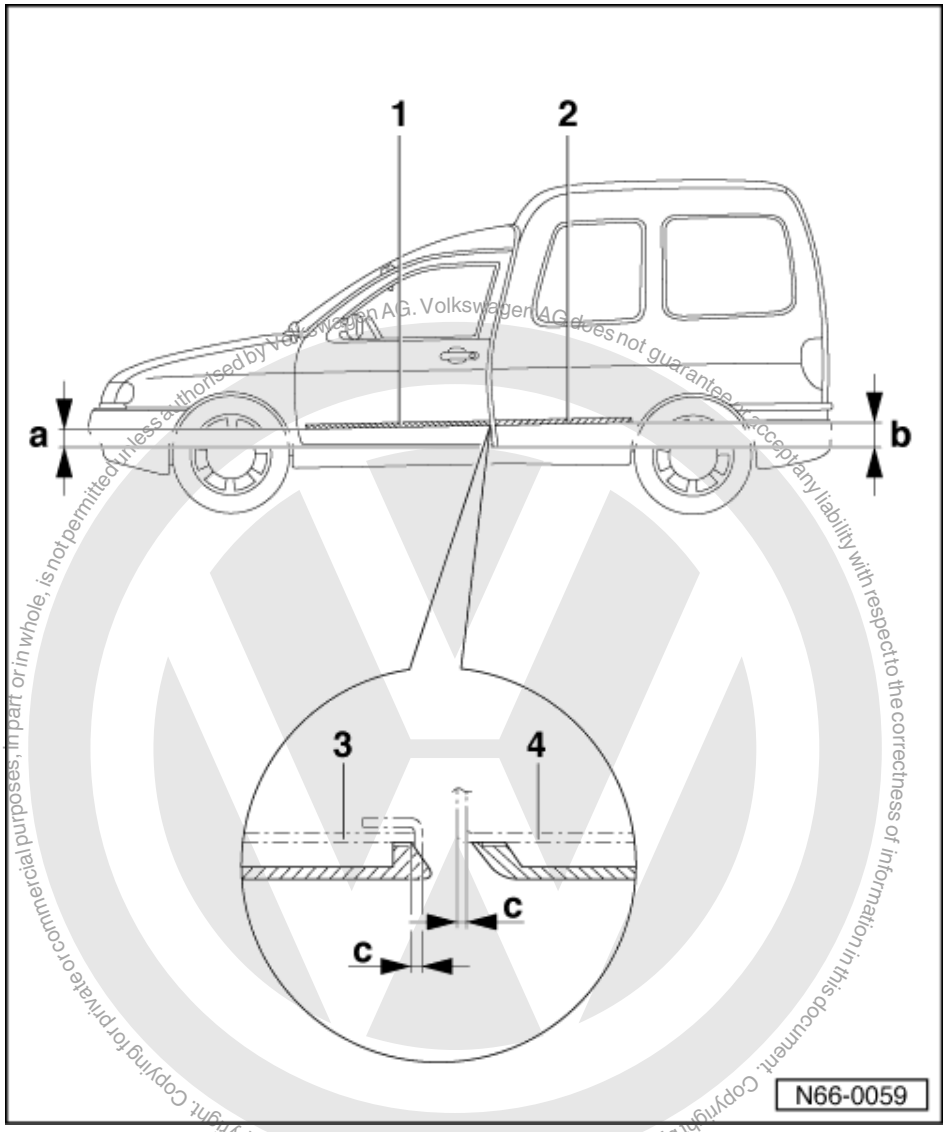

Protected by copyright. Copyright by Volkswagen AG.
Copying for private or commercial purposes, in part or in whole, is not permitted unless authorised by Volkswagen AG. Volkswagen AG does not guarantee or accept any liability with respect to the correctness of information in this document.

5.2 - Renewing side protective strips (Caddy)

Note:

If side protective strips are on the vehicle, then the replacement side protective strip must be aligned to these.

1 Front door protective strip
- Self-adhesive
- Material PUR (25% Glass fibre reinforced)
- Removing:
- To remove, warm side protective strip with hot air blower (V.A.G 1416) and pull off door.

satelettronica

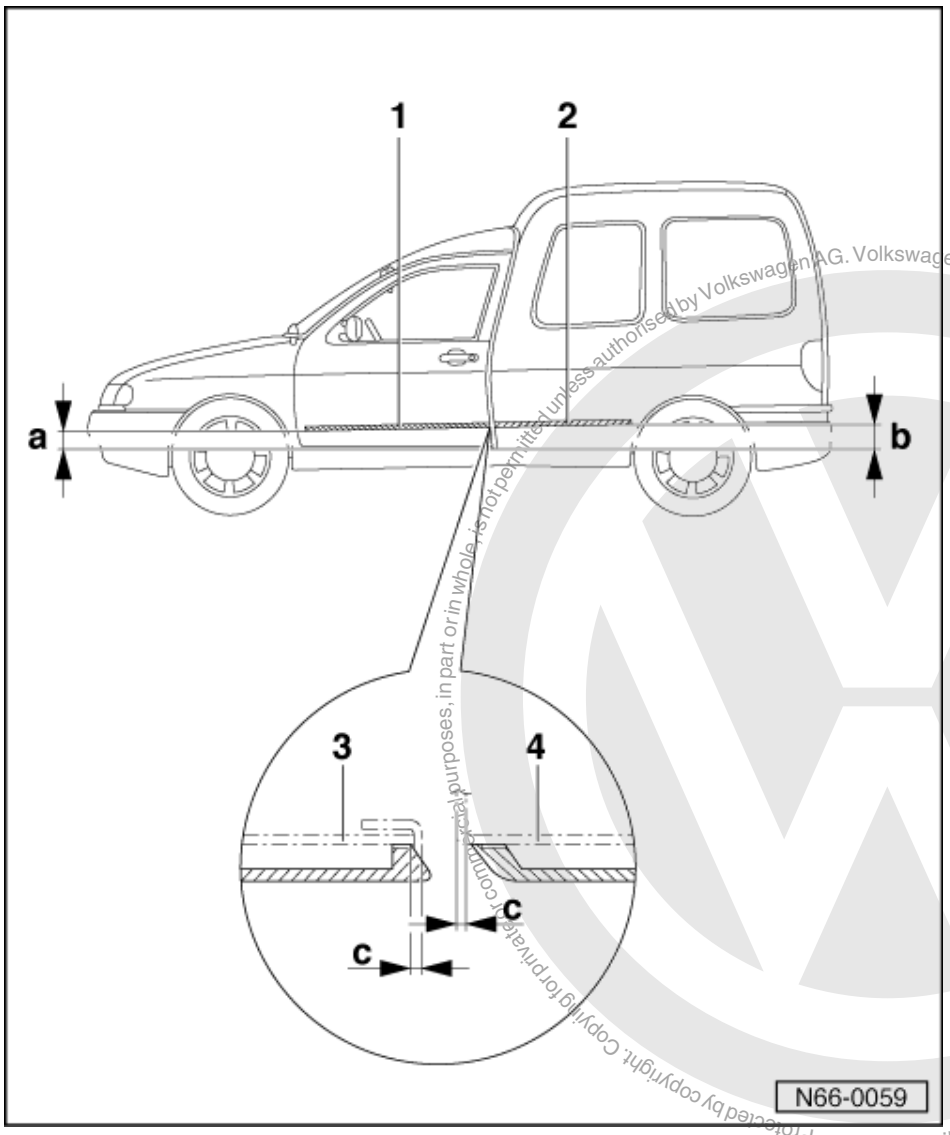

Protected by copyright. Copying for private or commercial purposes, in part or in whole, is not permitted unless authorised by Volkswagen AG. Volkswagen AG does not guarantee or accept any liability with respect to the correctness of information in this document. Copyright by Volkswagen AG.

- Installing:
- Clean exterior panels with petrol, and then treat with silicone remover and rub dry.
- Mark position of side protective strips on vehicle.
- Pull off protective foil, attach side protective strip lightly and then press forcefully on (before pressing on, check side protective strip has not moved). The temperature of the outer panel and side protective strip should be approx. 40 °C.

2 Rear door protective strip

- Self-adhesive
- Material PUR (25% Glass fibre reinforced)
- Remove and install as per front door protective strip - 1 -.

satelettronica

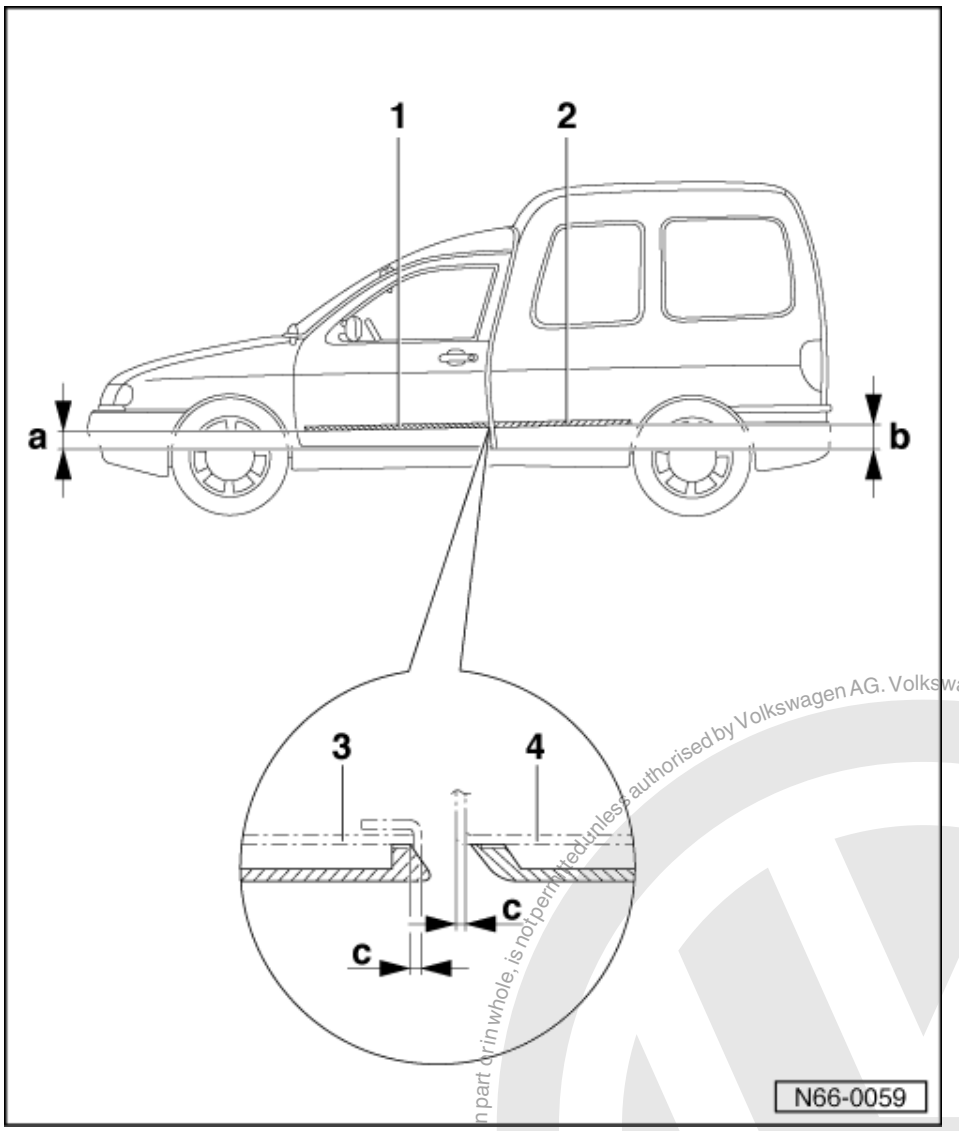

3 Front door
4 Rear door

Dimensions:

a - 165 mm
b - 183 mm
c - 1.5 mm

Protected by copyright. Copying for private or commercial purposes, in part or in whole, is not permitted unless authorised by Volkswagen AG. Volkswagen AG does not guarantee or accept any liability with respect to the correctness of information in this document. Copyright by Volkswagen AG.
satelettronica

5.3 - Renewing side protective strips (Polo Classic, Polo Estate)

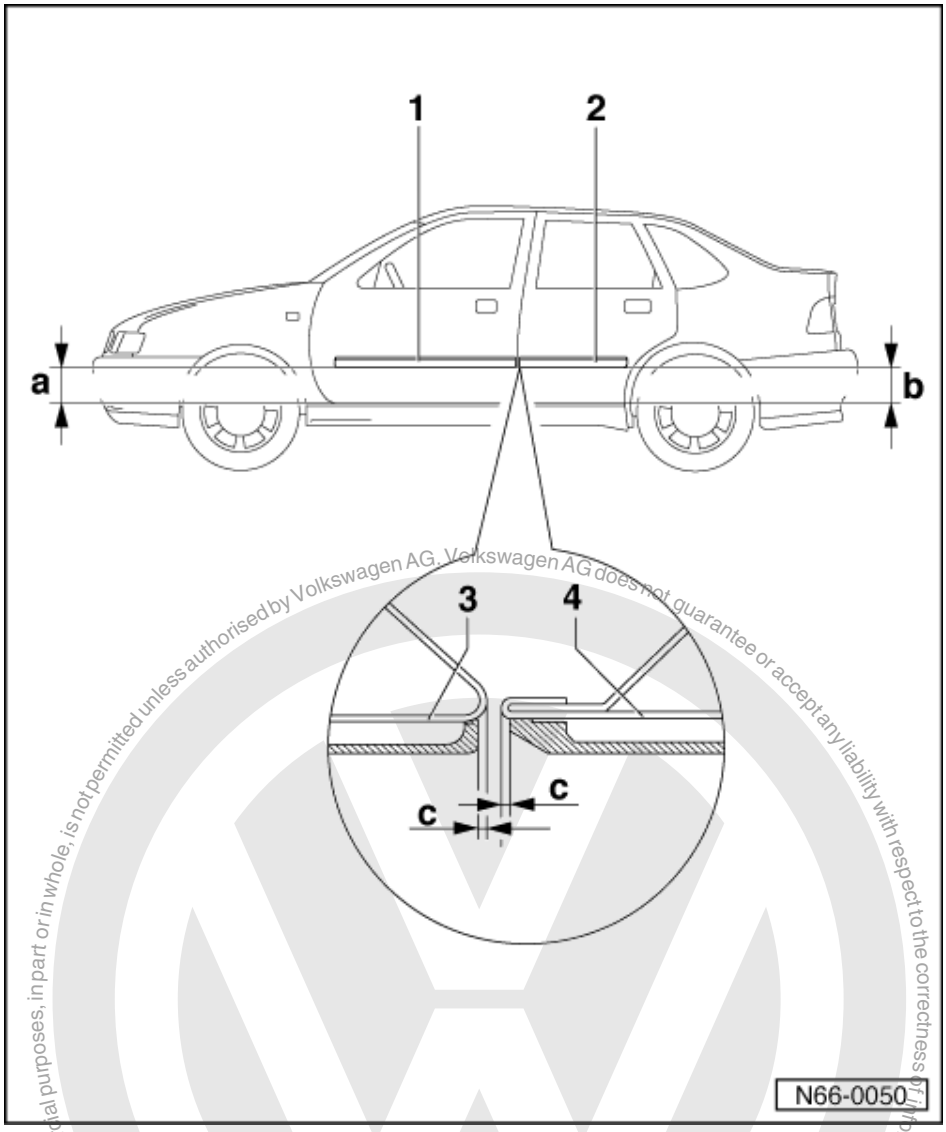

Notes:

- If side protective strips are on the vehicle, then the replacement side protective strip must be aligned to these.
- The dimensions given are valid for the Polo Estate also.

1 Front door protective strip
- Self-adhesive
- Material PUR (25% Glass fibre reinforced)
- Painted in body colour, spare parts are supplied primed.
- Removing:
- To remove, warm side protective strip with hot air blower (V.A.G 1416) and pull off door.

Copyright by Volkswagen AG. Volkswagen AG does not guarantee or accept any liability with respect to the correctness of information in this document. Copying for private or commercial purposes, in part or in whole, is not permitted unless authorised by Volkswagen AG.

satelettronica

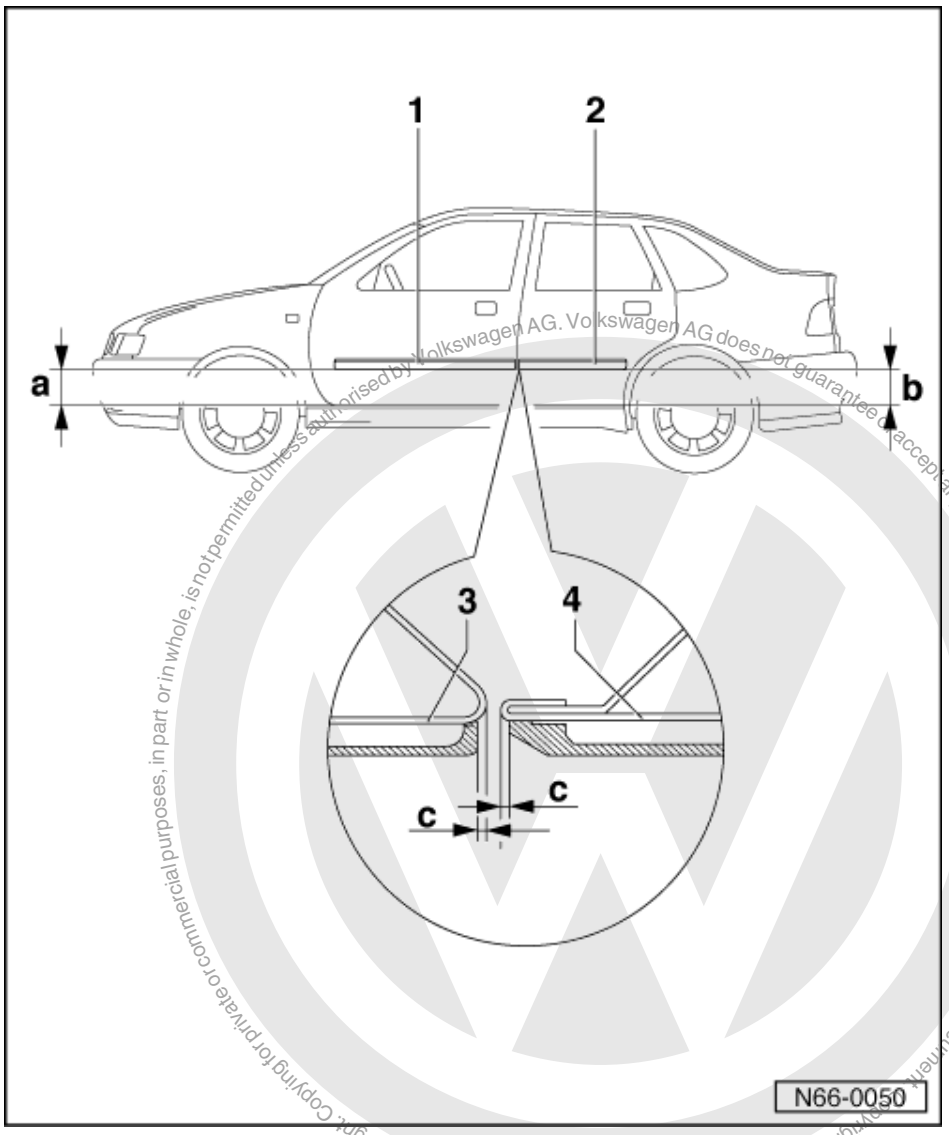

- Installing:
- Clean exterior panels with petrol, and then treat with silicone remover and rub dry.
- Mark position of side protective strips on vehicle.
- Pull off protective foil, attach side protective strip lightly and then press forcefully on (before pressing on, check side protective strip has not moved). The temperature of the outer panel and side protective strip should be approx. 40 °C.

2 Rear door protective strip

- Self-adhesive
- Material PUR (25% Glass fibre reinforced)
- Painted in body colour, spare parts are supplied primed.
- Remove and install as per front door protective strip - 1 -.

Copyright by Volkswagen AG. Volkswagen AG does not guarantee or accept any liability with respect to the correctness of information in this document. Copyright by Volkswagen AG. Copyright for private or commercial purposes, in part or in whole, is not permitted unless authorised by Volkswagen AG.
satelettronica

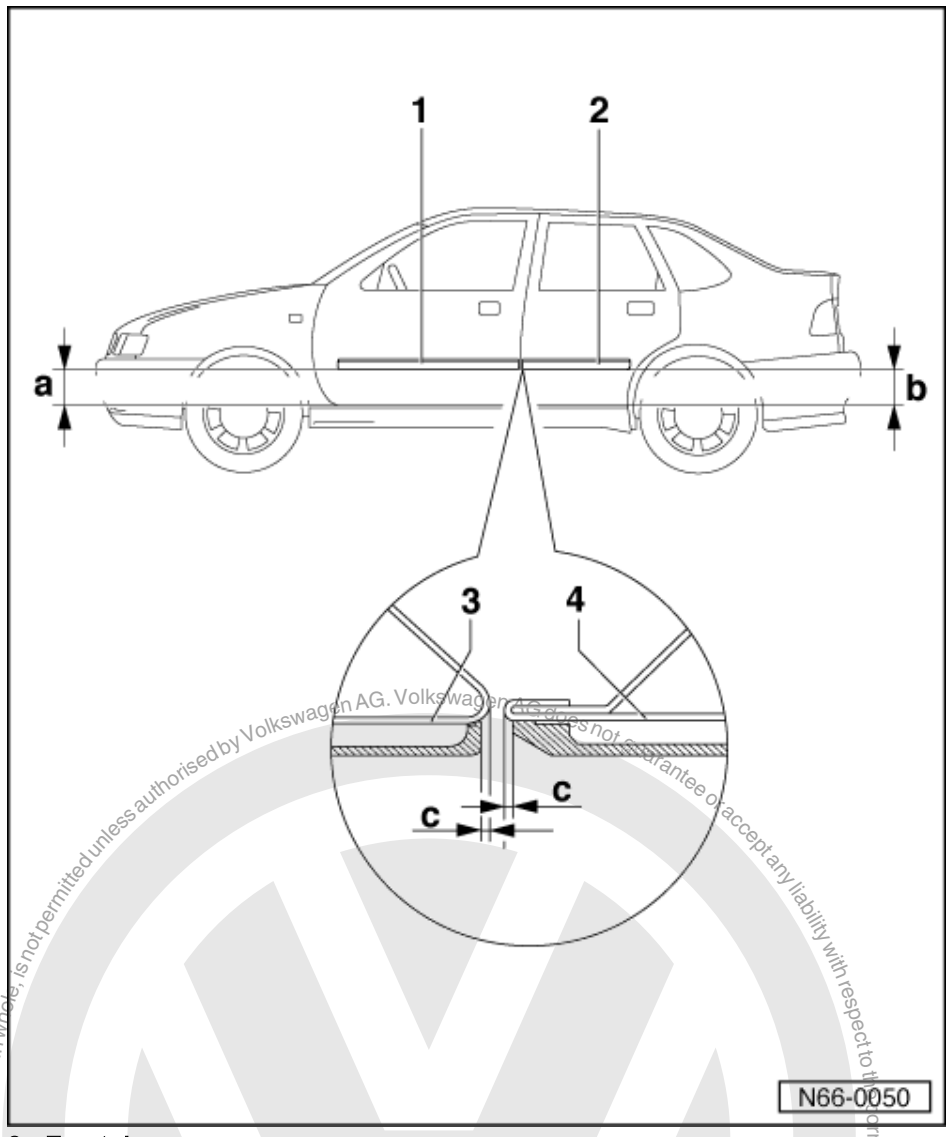

3 Front door
4 Rear door

Dimensions:

a - 244 mm
b - 260 mm
c - 6 mm

Protected by copyright. Copying for private or commercial purposes, in part or in whole, is not permitted unless authorised by Volkswagen AG. Volkswagen AG does not guarantee or accept any liability with respect to the correctness of information in this document. Copyright by Volkswagen AG.
satelettronica

5.4 - Renewing roof protective strips (Polo Estate)

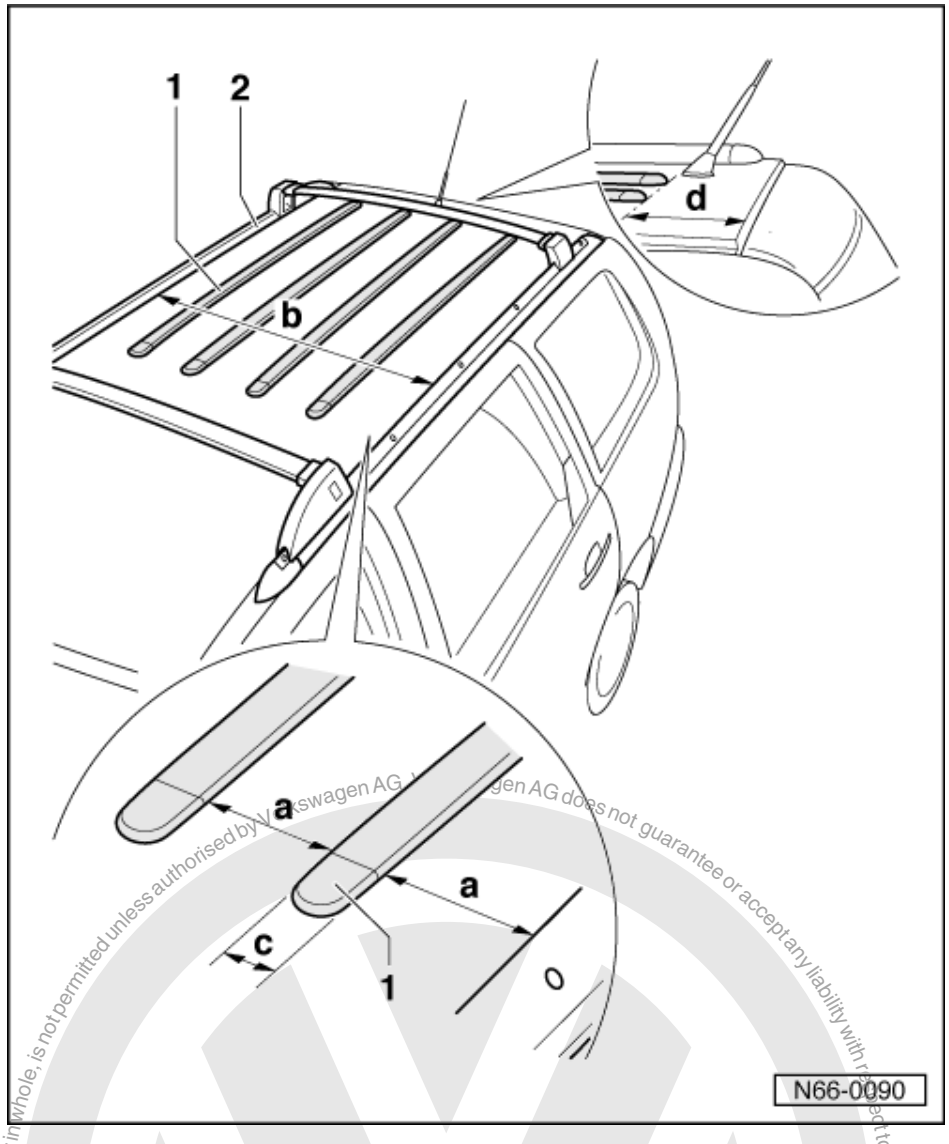

Note:

If roof protective strips are on the vehicle, then the replacement roof protective strip must be aligned to these.

1 Protective strip
- Self-adhesive
- Removing:
  - To remove, warm protective strip with hot air blower (V.A.G 1416) and pull off roof.
- Installing:
  - Clean exterior panels with petrol, and then treat with silicone remover and rub dry.
  - Mark position of protective strips on vehicle.
  - Pull off protective foil, attach protective strip lightly and then press forcefully on. Working temperature approx. 40° C.

satelettronica
Protected by copyright. Copying for private or commercial purposes, in part or in whole, is not permitted unless authorised by Volkswagen AG. Volkswagen AG does not guarantee or accept any liability with respect to the correctness of information in this document. Copyright by Volkswagen AG.

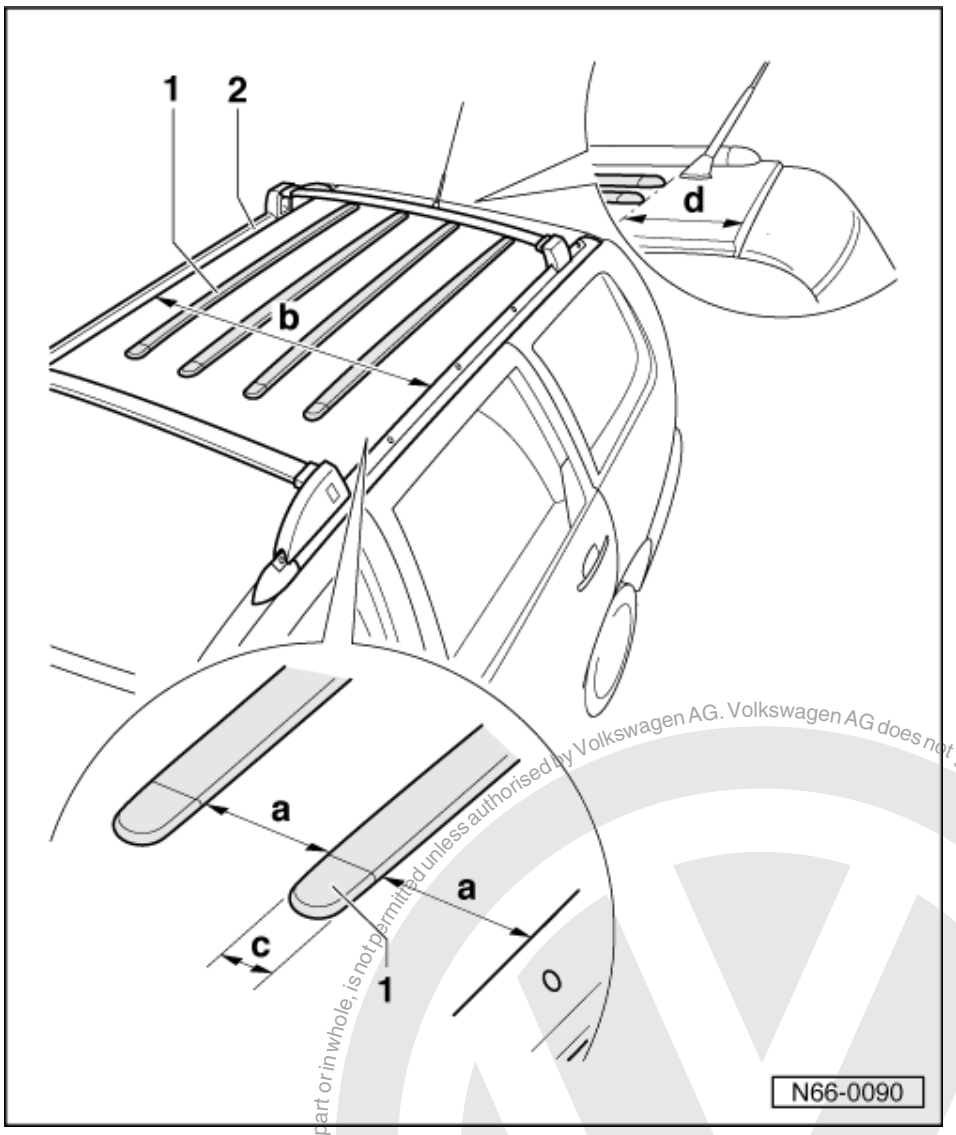

2 Roof railing

- Removing and installing => Page 162

Dimensions:

The rear of the protective strips end in front of the aerial base.

Dimension -d- (distance from rear roof edge to end of protective strip) for all roof protective strips d = 155 mm.

If an individual protective strip is replaced it must be aligned to its neighbours.

Dimension -a- (distance between protective strips) is to be calculated from dimension -b- (distance between left and right roof railing) and dimension -c- (width of protective strip).

Calculate dimension -a- for front and rear.

Protected by copyright. Copyright by Volkswagen AG. Copyright by Volkswagen AG. Volkswagen AG does not guarantee or accept any liability with respect to the correctness of information in this document. Copyright by Volkswagen AG. Reproduction, in part or in whole, is not permitted unless authorised by Volkswagen AG. Volkswagen AG does not guarantee or accept any liability with respect to the correctness of information in this document. Copyright by Volkswagen AG.
satelettronica

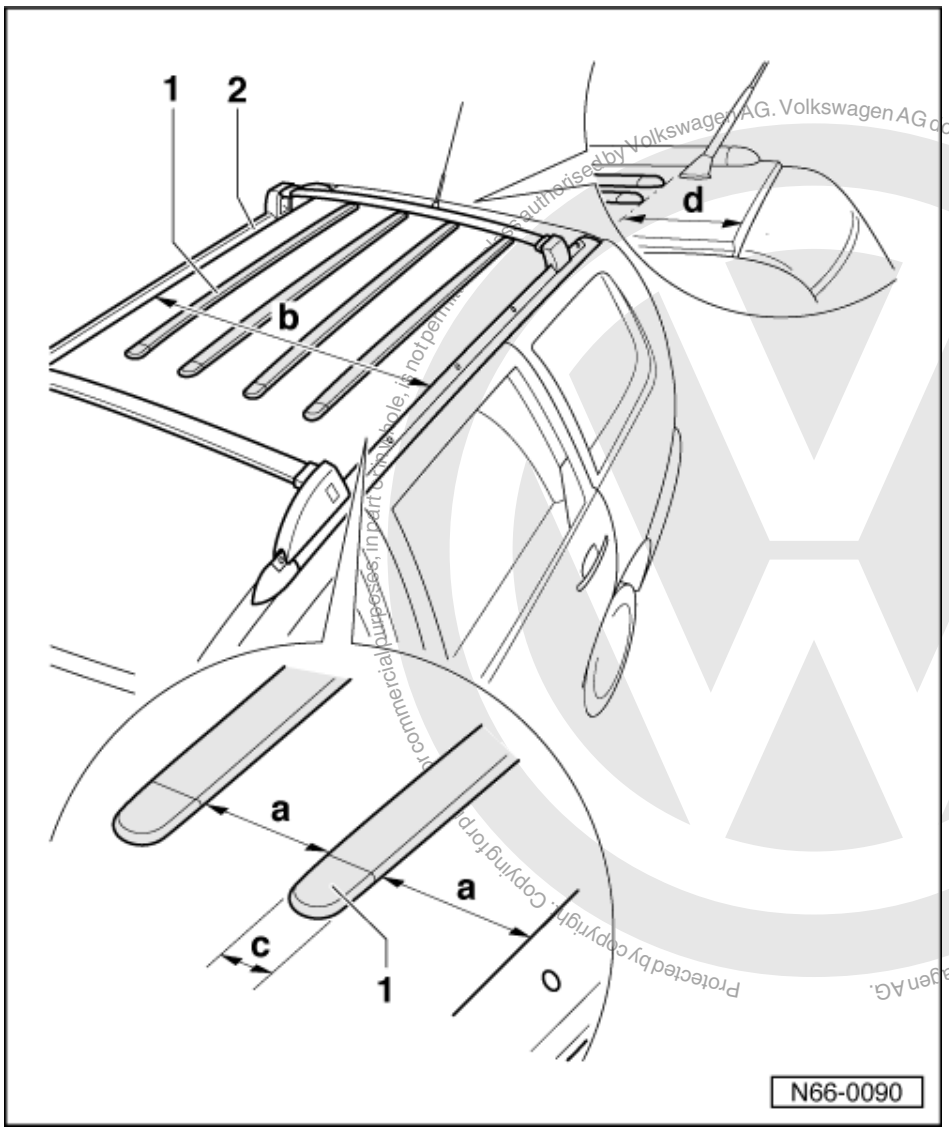

Protected by copyright. Copying for commercial purposes, in part or in whole, is not permitted unless authorised by Volkswagen AG. Volkswagen AG does not guarantee or accept any liability with respect to the correctness of information in this document. Copyright by Volkswagen AG.

satelettronica

Example:

b = 950 mm
c = 32.5 mm
a = (b - 4c) /5
a = (950 mm - 130 mm) / 5
a = 164 mm

6 - Rear view mirror

6.1 - Rear view mirror

6.2 - Tools

Special tools, workshop equipment, testers, measuring instruments and auxiliary items required

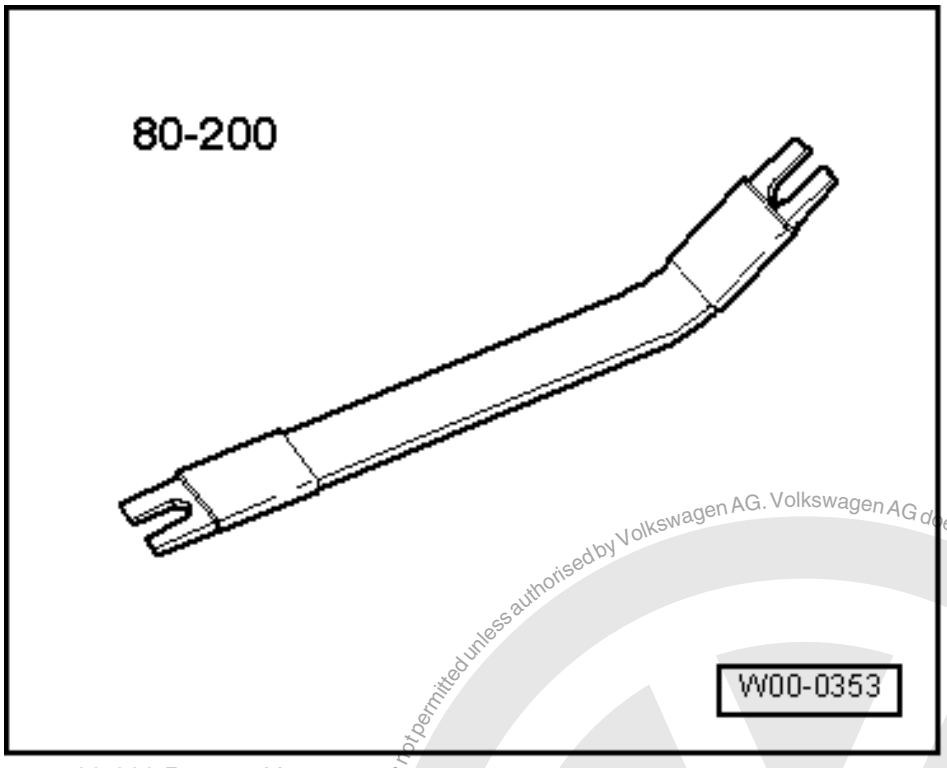

- -> 80-200 Removal lever

Protected by copyright. Copying for private or commercial purposes, in part or in whole, is not permitted unless authorised by Volkswagen AG. Volkswagen AG does not guarantee or accept any liability with respect to the correctness of information in this document. Copyright by Volkswagen AG.
satelettronica

6.3 - Exterior mirror (Caddy)

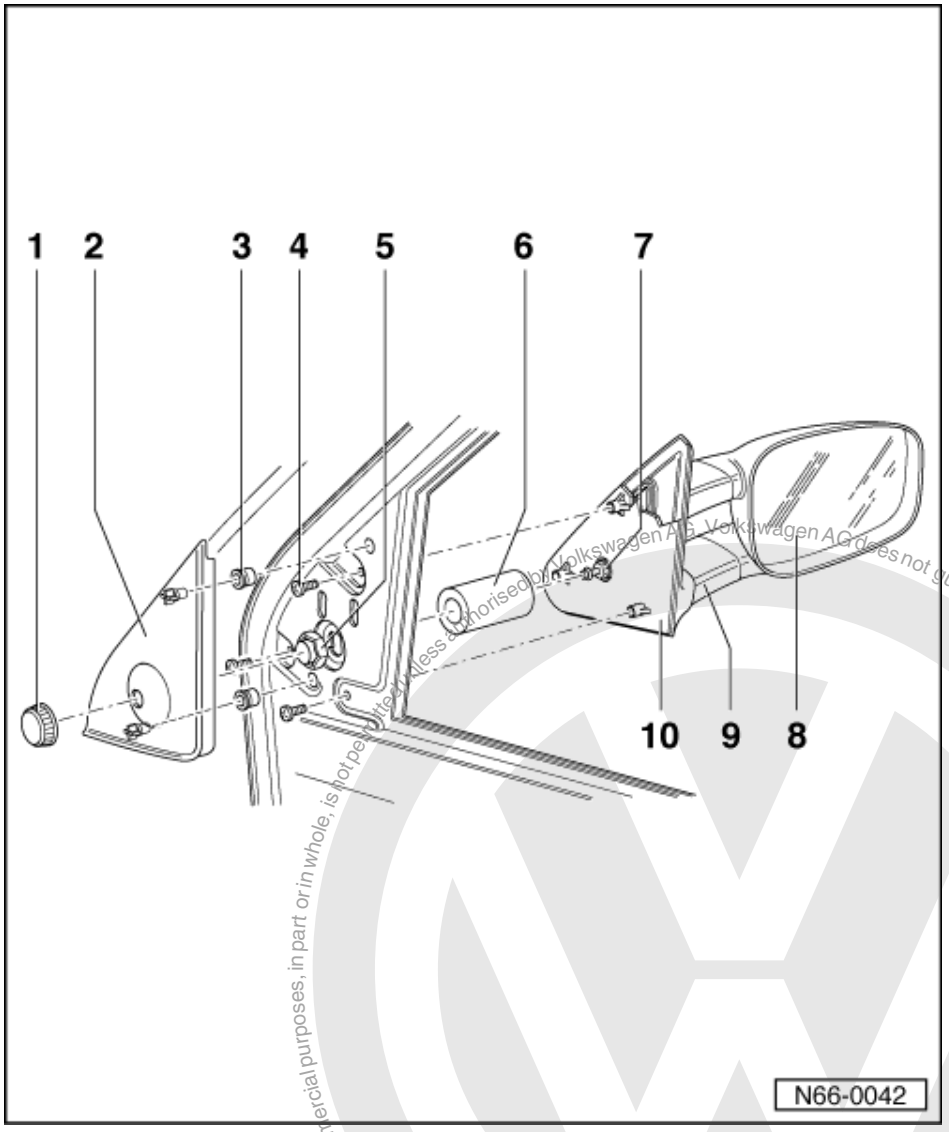

1 Operating button
- Pushed onto control

2 Cover
- Pull off door frame at right angles
- When doing this support with removal lever 80-200

3 Clip

4 Bolt
- 2 Nm

5 Nut
- For manually adjustable mirror
- 2 Nm

6 Gasket

Protected by copyright. Copyright by Volkswagen AG.
Volkswagen AG does not guarantee or accept any liability with respect to the correctness of information in this document.
Copyright by Volkswagen AG, authorised only for private or commercial purposes, in part or in whole, is not permitted unless authorised by Volkswagen AG.
satelettronica

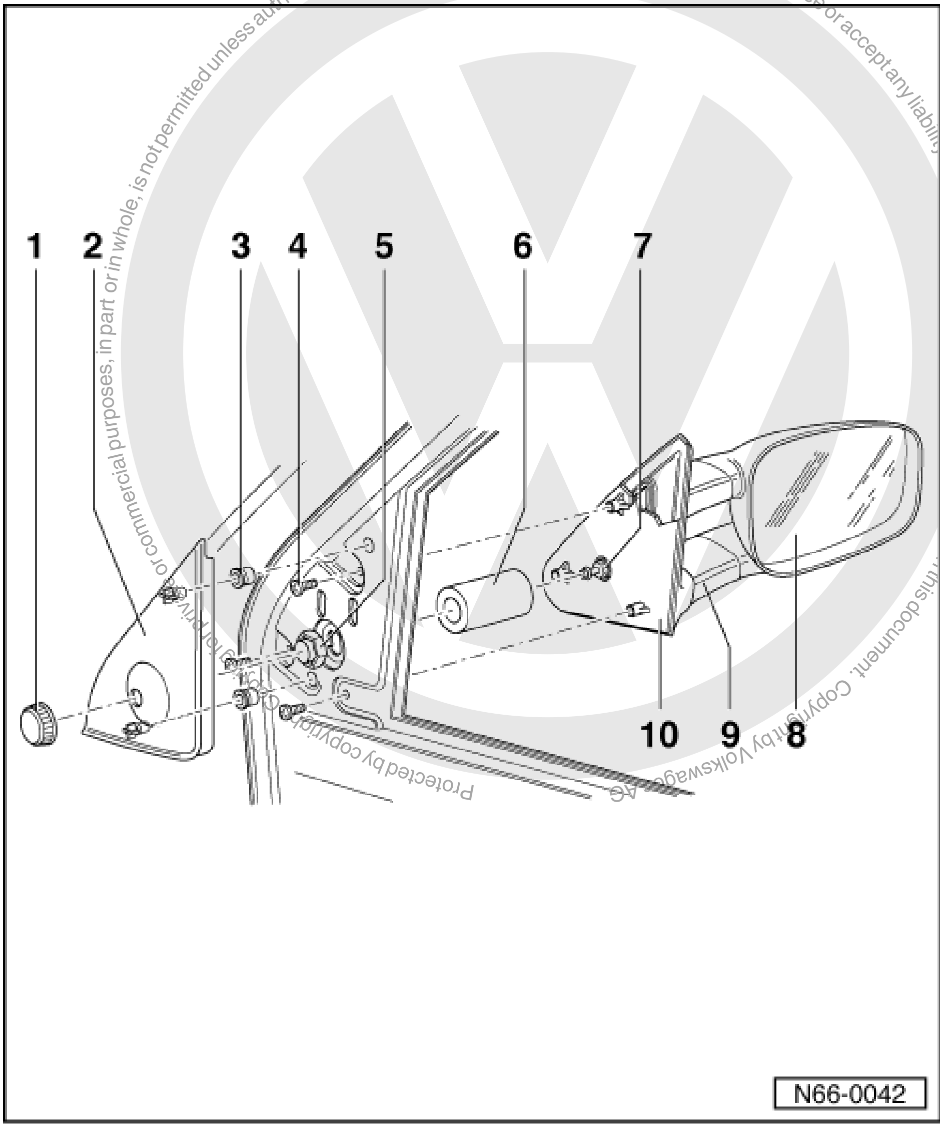

7 Mechanism (manual)

8 Mirror glass

- Clipped in in the case of both versions (adjustable manually and electrically)
- Removing - first, press mirror down then up (special tool 80-200). Protect mirror housing from damage
- Installing - insert mirror with guide studs into mounts and press on
- Press only on centre of mirror - always use protective gloves

9 Mirror housing

10 Mirror baseplate

Protected by copyright. Copying for private or commercial purposes, in part or in whole, is not permitted unless authorised by Volkswagen AG. Volkswagen AG does not guarantee or accept any liability with respect to the correctness of information in this document. Copyright by Volkswagen AG.

satelettronica

6.4 - Exterior mirror (Polo Classic, Polo Estate)

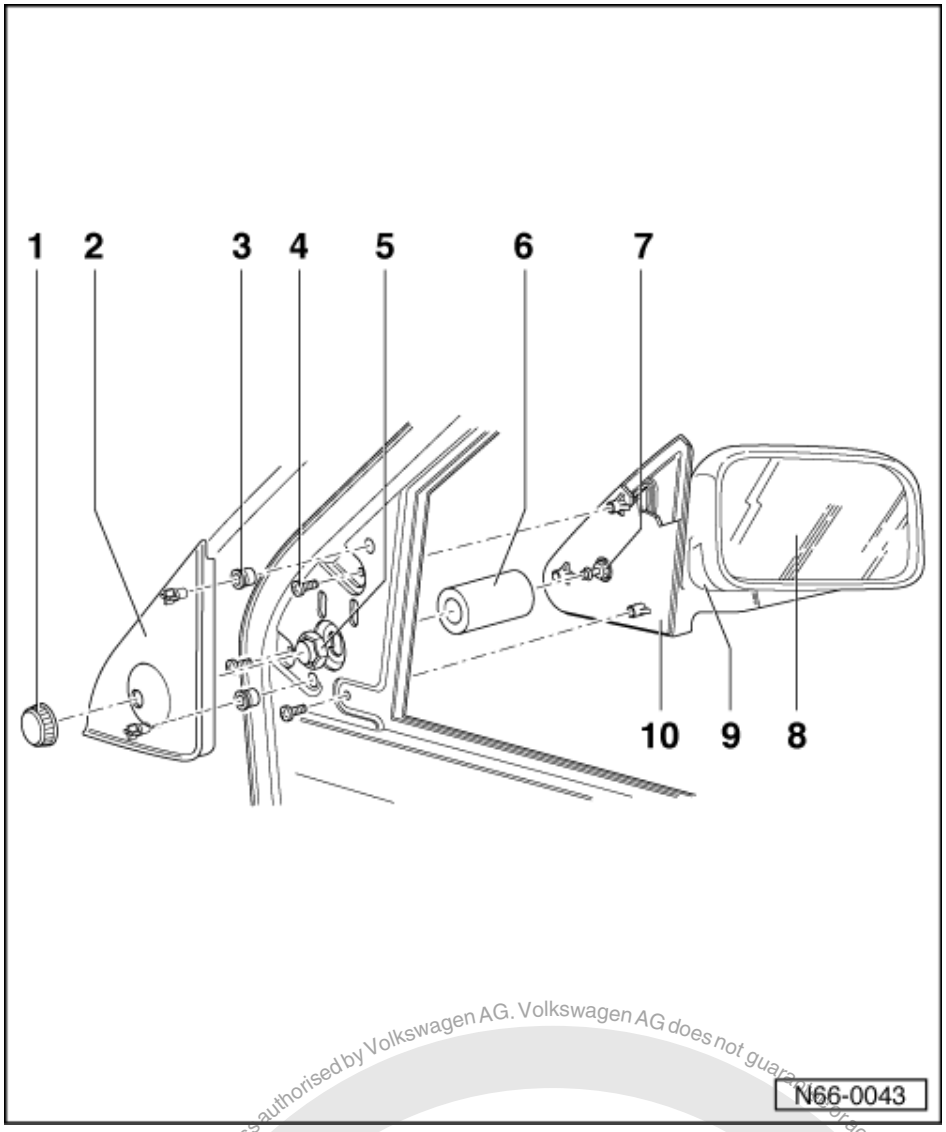

Manually adjustable exterior mirror ▸ 09.99

1 Operating button
- Pushed onto control

2 Cover
- Pull off door frame at right angles
- When doing this support with removal lever 80-200

3 Clip

4 Bolt
- 2 Nm

5 Nut
- For manually adjustable mirror
- 2 Nm

6 Gasket

satelettronica
Protected by copyright. Copying for private or commercial purposes, in part or in whole, is not permitted unless authorised by Volkswagen AG. Volkswagen AG does not guarantee or accept any liability with respect to the correctness of information in this document. Copyright by Volkswagen AG.

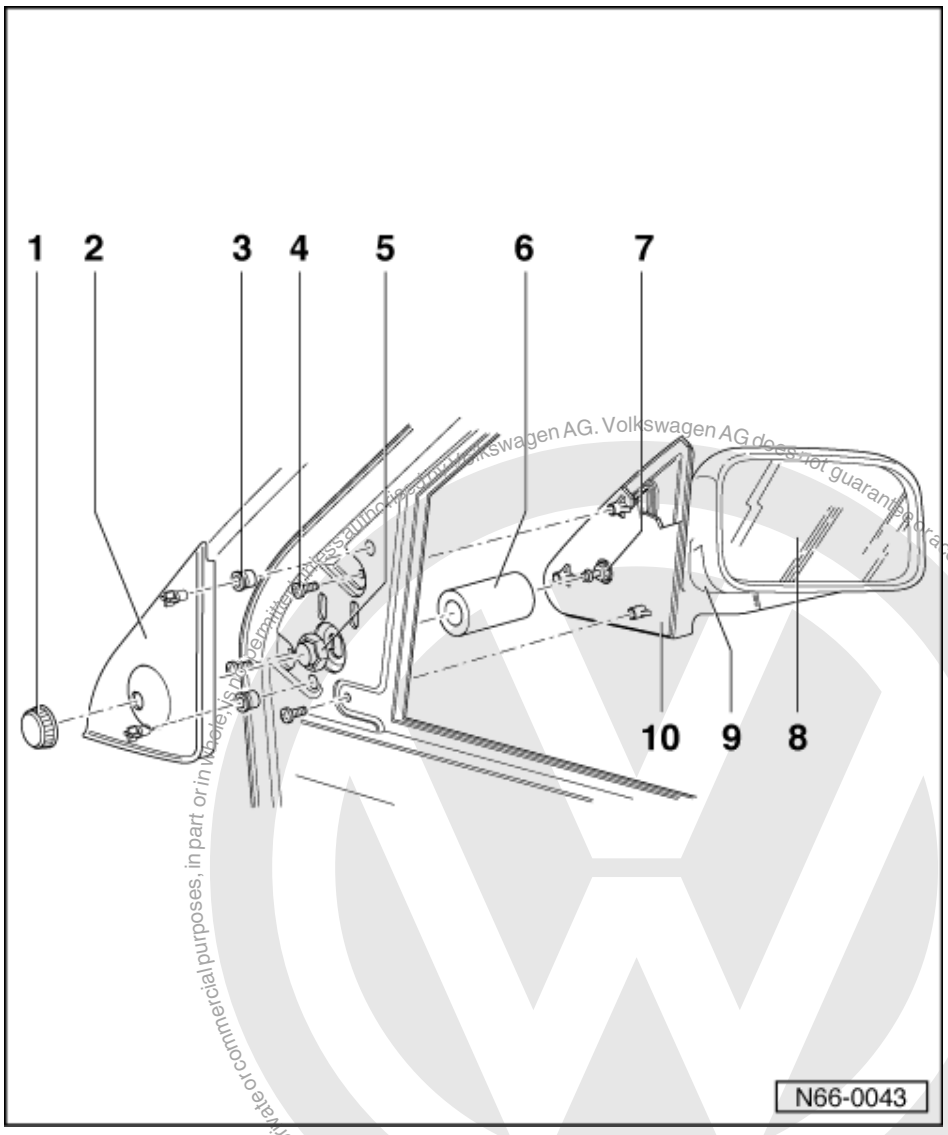

7 Mechanism (manual)
8 Mirror glass
- Removing - first, press mirror down then up (special tool 80-200). Protect mirror housing from damage
- Installing - insert mirror with guide studs into mounts and press on
- Press only on centre of mirror - always use protective gloves

9 Mirror housing
10 Mirror baseplate

satelettronica

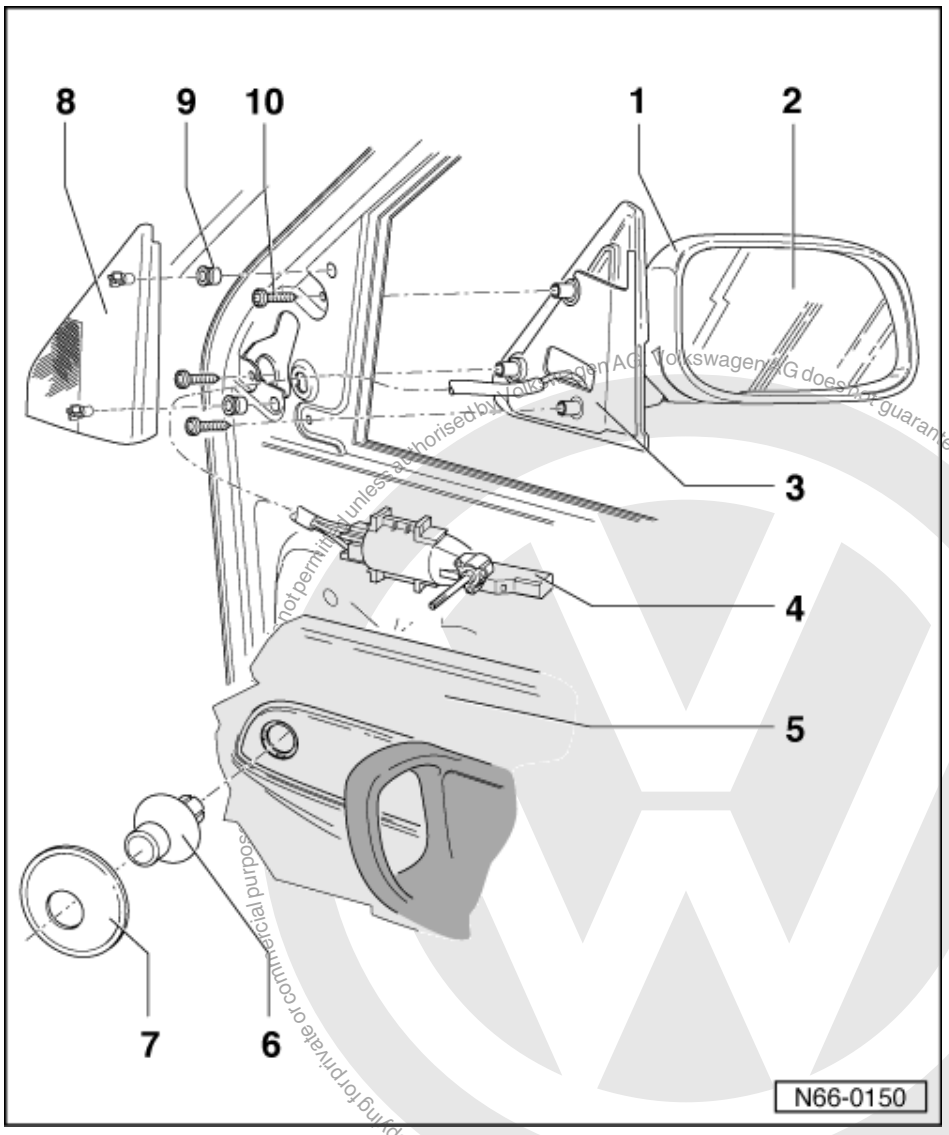

Manually adjustable exterior mirror 10.99 ▸

Note:

To remove, the front door trim panel must be taken off first of all.

1 Mirror housing
- Removing => Page 192

2 Mirror glass
- Removing - first, press mirror down then up (special tool 80-200). Protect mirror housing from damage
- Installing - insert mirror with guide studs into mounts and press on
- Press only on centre of mirror - always use protective gloves

Protected by copyright. Copying for private or commercial purposes, in part, is not permitted unless authorised by Volkswagen AG. Volkswagen AG does not guarantee or accept any liability with respect to the correctness of information in this document. Copyright by Volkswagen AG.
satelettronica

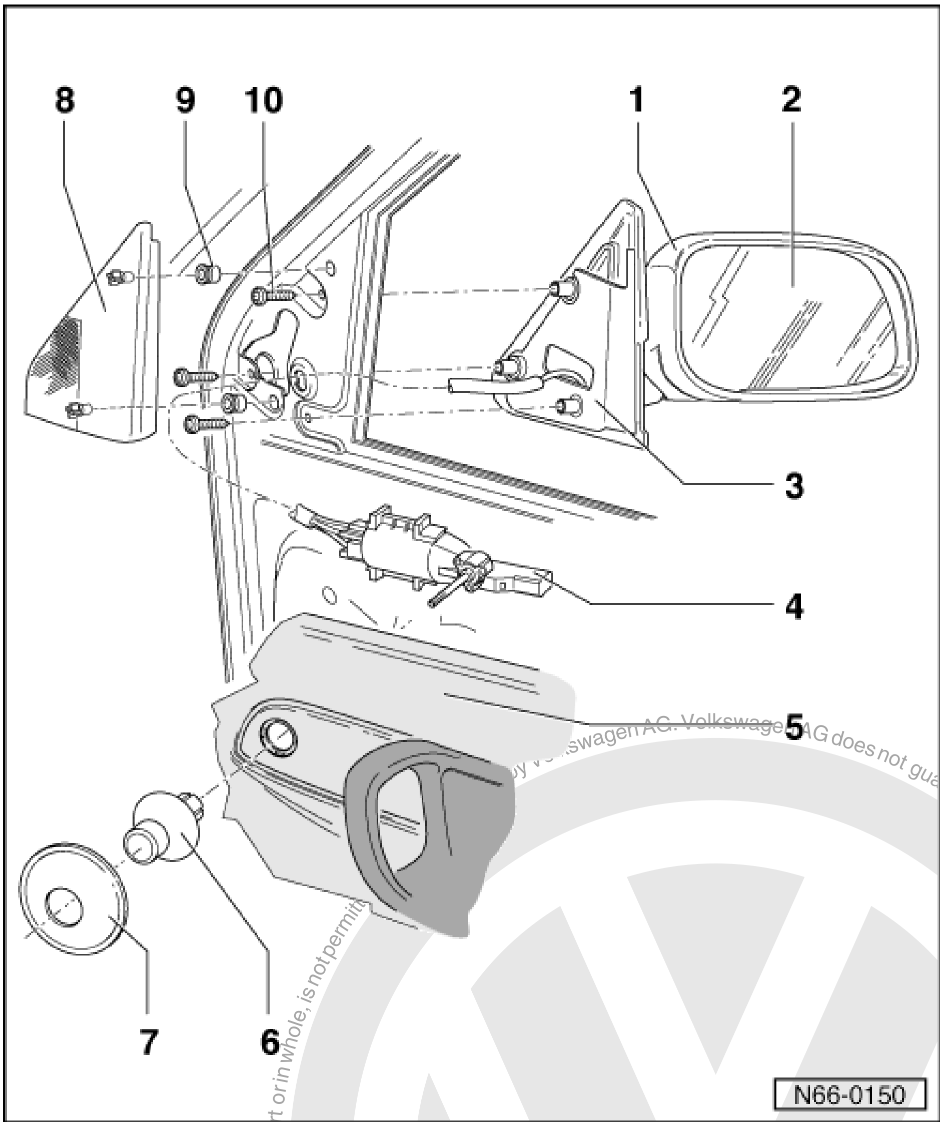

3 Mirror baseplate

4 Mechanism (manual)

- Clipped in door trim - 5 -

5 Door trim

6 Control knob

- Pushed onto control

7 Cover

- Clipped in door trim - 5 -

8 Cover

- Pull off door frame at right angles
- When doing this support with removal lever 80-200
- Disconnect loud speaker connector

Protected by copyright. Copying for private or commercial purposes, in part or in whole, is not permitted unless authorised by Volkswagen AG. Volkswagen AG does not guarantee or accept any liability with respect to the correctness of information in this document. Copyright by Volkswagen AG.

satelettronica

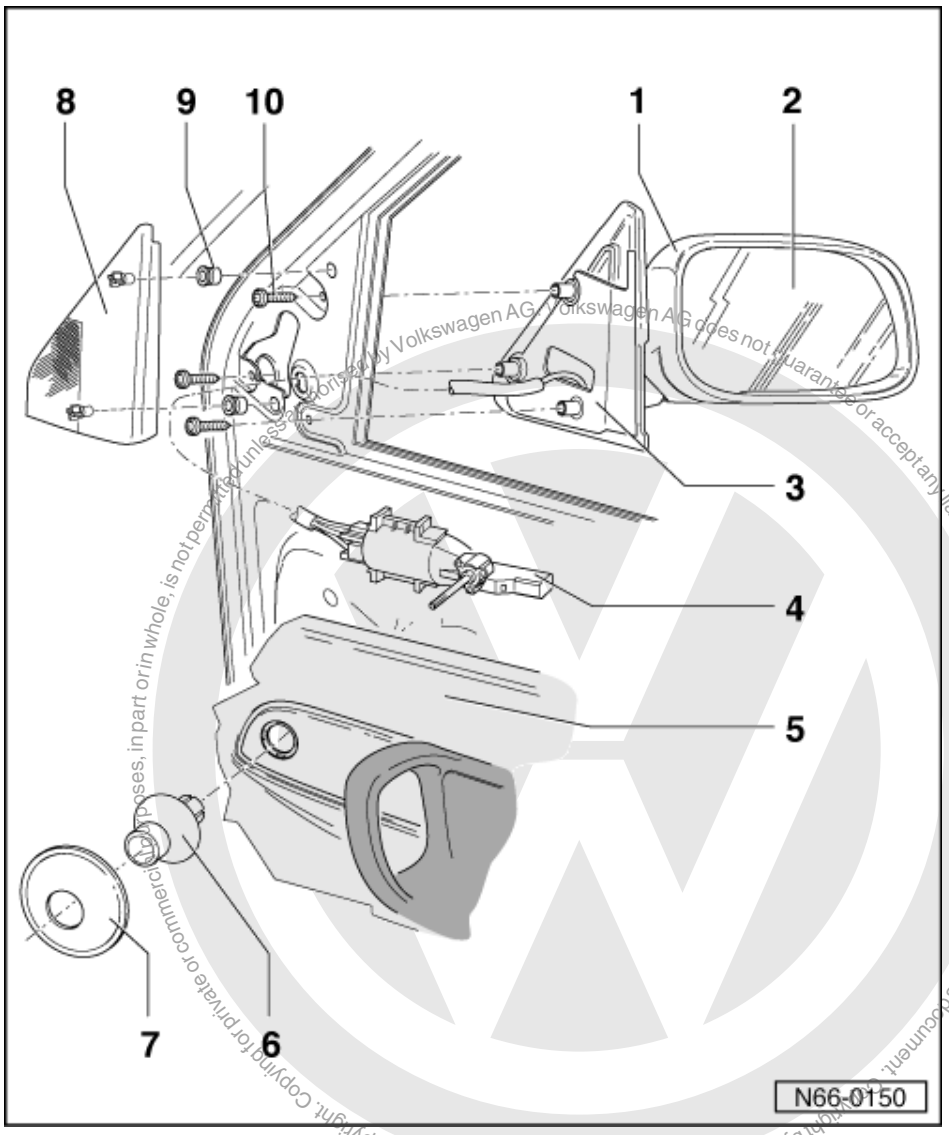

9 Clip
10 Bolt
- 3 Nm

Protected by copyright. Copying for private or commercial purposes, in part or in whole, is not permitted unless authorised by Volkswagen AG. Volkswagen AG does not guarantee or accept any liability with respect to the correctness of information in this document. Copyright by Volkswagen AG.
satelettronica

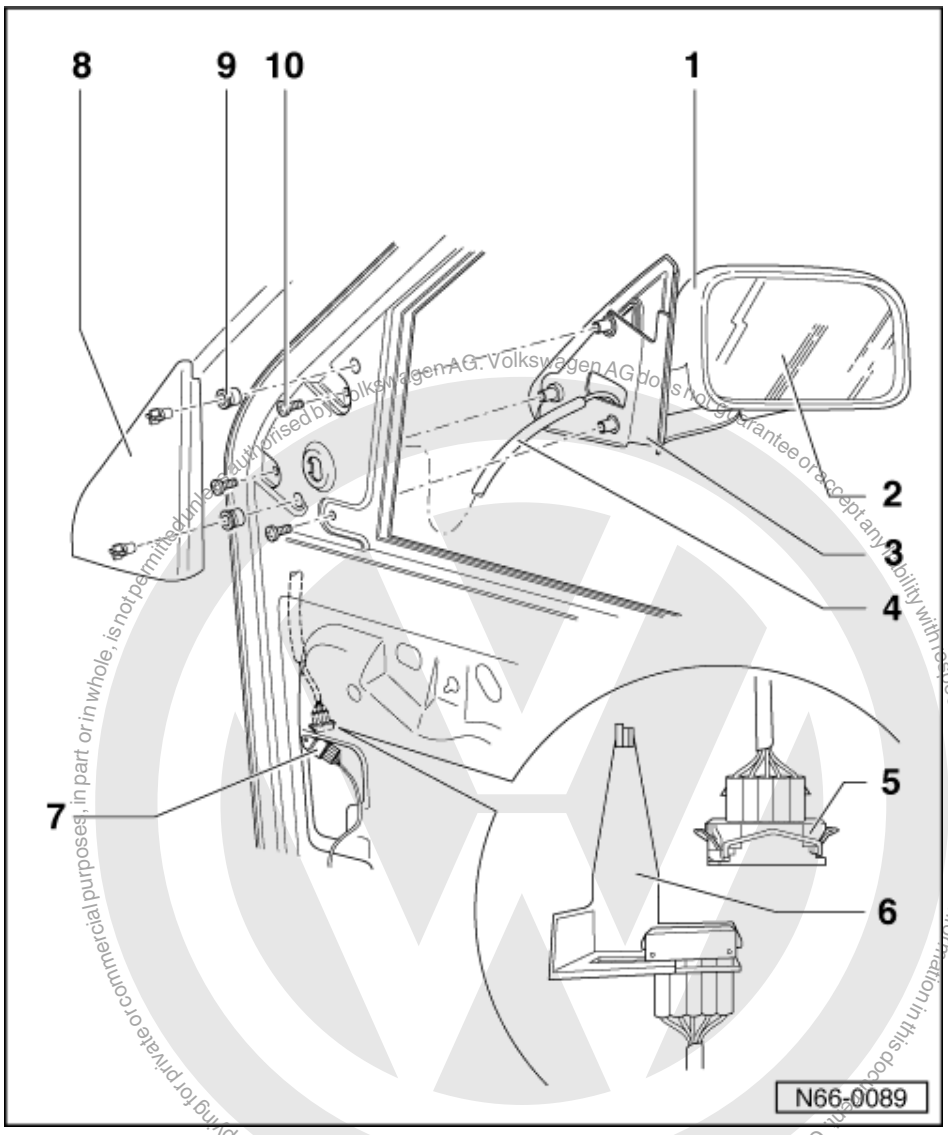

Protected by copyright. Copying for private or commercial purposes, in part or in whole, is not permitted unless authorised by Volkswagen AG. Volkswagen AG does not guarantee or accept any liability with respect to the correctness of information in this document. Copyright by Volkswagen AG.

satelettronica

Electrically adjustable exterior mirror

1 Mirror housing
- Removing on vehicles 10.99 ‣ => Page 192

2 Mirror glass
- Removing - first, press mirror down then up (special tool 80-200). Protect mirror housing from damage
- Disconnect/reconnect mirror heater connector
- Installing - insert mirror with guide studs into mounts and press on
- Press only on centre of mirror - always use protective gloves

3 Mirror baseplate

4 Foam tube

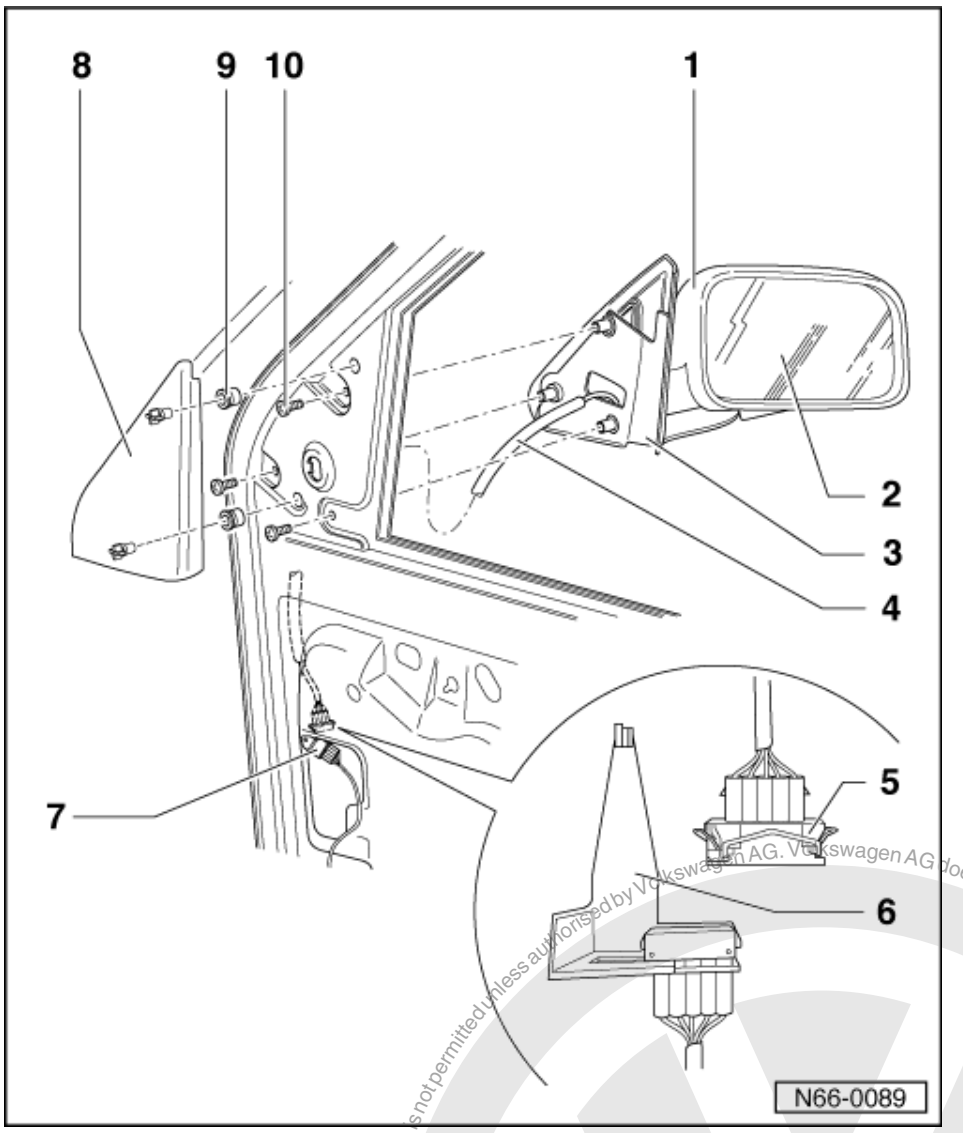

5 Connector

6 Bracket
- For connector
- Clipped onto door

7 Connector

8 Cover
- Pull off door frame at right angles
- When doing this support with removal lever 80-200
- Disconnect loud speaker connection

9 Clip

10 Bolt
- 3 Nm

Protected by copyright. Copying for private or commercial purposes, in part or in whole, is not permitted unless authorised by Volkswagen AG. Volkswagen AG does not guarantee or accept any liability with respect to the correctness of information in this document. Copyright by Volkswagen AG.
satelettronica

6.5 - Removing mirror housing (Polo Classic, Polo Estate) 10.99 >

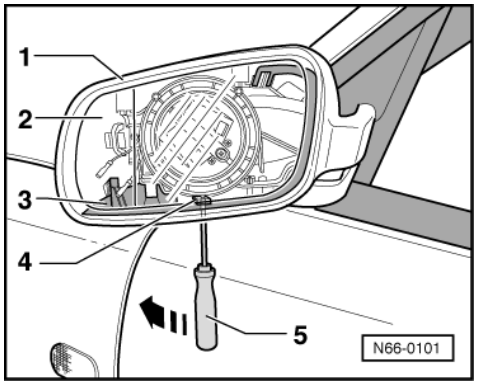

- Fold rear view mirror forwards to ease dismantling/assembly procedure.
- -> Position mirror glass -2- vertical (otherwise mirror housing can catch on mirror glass when pulling off).
- Insert screwdriver -5- through assembly hole of mirror carrier up to clip -4-.
- Press screwdriver -5- in direction of arrow (this will cause the clip -4- to release the mirror housing).

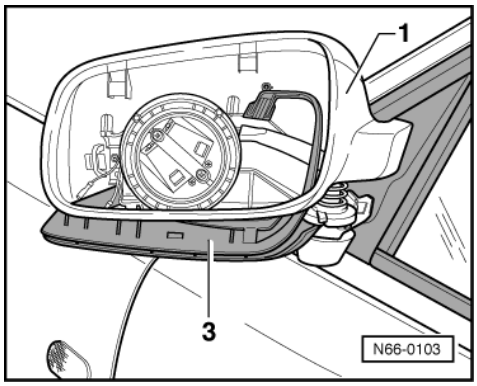

- -> Pull mirror housing -1- off mirror carrier -3- upwards.

Protected by copyright. Copying for private or commercial purposes, in part or in whole, is not permitted unless authorised by Volkswagen AG. Volkswagen AG does not guarantee or accept any liability with respect to the correctness of information in this document. Copyright by Volkswagen AG.
satelettronica